Zmotion®
正运动技术

做更好用的运动控制，智造美好生活
Better Motion Control, Smarter Life

# Pulse & EtherCAT Motion Conrtroller

# ZMC432-V2

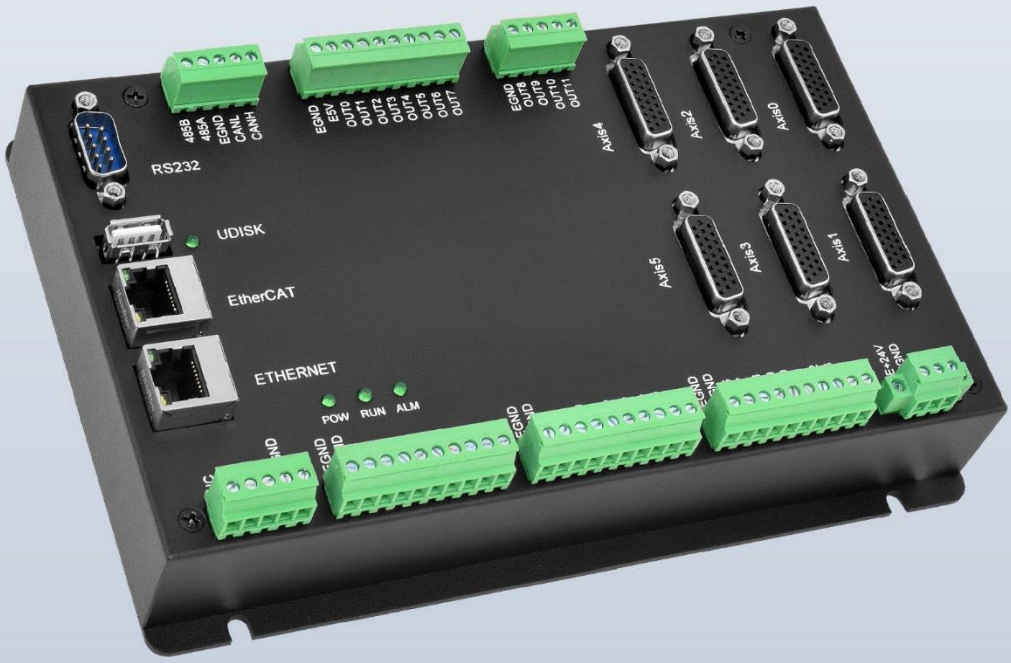


This manual is mainly for ZMC432-V2, ZMC432-16-V2, ZMC432-16R-V2

Vision Motion Controller

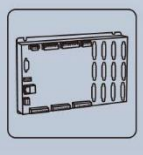
Motion Controller

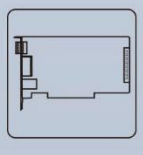
Motion Control Card

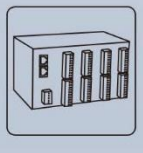
IO Expansion Module

HMI

## Statement

Thank you for choosing our Zmotion products. Please be sure to read this manual carefully before use so that you can use this product correctly and safely. Zmotion is not responsible for any direct or indirect losses caused by the use of this product.

The copyright of this manual belongs to Shenzhen Zmotion Technology Co., Ltd. And reproduction, translation, and plagiarism of any content in this manual in any form is strictly prohibited without the written permission of Zmotion.

The information in this manual is for reference only. Due to design improvements and other reasons, Zmotion reserves the right of final interpretation of this information! Contents are subject to change without prior notice!

## ➢ Notes

In order to prevent possible harm and damage caused by incorrect use of this product, the following instructions are given on matters that must be observed.

### ■ Danger

| | |
|---|---|
| Do not use it in places with water, corrosive or flammable gases, or near flammable substances. | May cause electric shock, fire, damage, etc. |
| When installing or disassembling, make sure the product is powered off. | |
| Cables should be connected securely, and exposed parts that are energized must be insulated by insulators. | |
| Wiring work must be performed by professionals. | |

### ■ Notes

| | |
|---|---|
| It should be installed within the specified environmental range. | May cause damage, mis-operation, etc. |
| Make sure there are no foreign objects on the product hardware circuit board. | |
| After installation, the product and the mounting bracket should be tight and firm. | |
| After installation, at least 2-3cm should be left between the product and surrounding components for ventilation and replacement. | |
| Never disassemble, modify, or repair it by yourself. | |

# Content

Chapter I Production Information....5
1.1. Product Information....5
1.2. Interface Introdution....6
1.3. Product Specifications....7
1.4. Nameplate & Order Information....9
1.5. Environment Requirements....9
1.6. Hardware Installment....10
Chapter II Hardware Interfaces....11
2.1. Power IN....11
Specification....11
2.2. DI: Digital Inputs....11
Specification....12
Wiring....13
Usage Method....14
2.3. DO: Digital Outputs....15
Specification....15
Wiring....16
Usage Method....17
2.4. DA: Analog Outputs....18
Specification....18
Wiring....19
Usage Method....19
2.5. RS485 & CAN....20
Specification....20
Wiring....20
Usage Method....21
2.6. RS232....23
Specification....23
Wiring....23
Usage Method....24
2.7. U Disk....24
Specification....25
Usage Method....25
2.8. ETHERNET....25
Specification....25
Wiring....26
Usage Method....26
2.9. EtherCAT....27

Specification ..... 27
Wiring ..... 27
Usage Method ..... 28
2.10. AXIS (Differential Pulse Axis) ..... 28
Specification ..... 31
Wiring ..... 31
Usage Method ..... 34
Chapter III Resources Expansion ..... 35
3.1. CAN Expansion ..... 35
Wiring ..... 35
Resources Mapping ..... 36
3.2. EtherCAT Expansion ..... 39
Wiring ..... 39
Resources Mapping ..... 41
Chapter IV Programming ..... 42
4.1. Program in RTSys Software ..... 42
4.2. Upgrade Controller Firmware ..... 47
4.3. Program in Host-Computer by PC Languages ..... 48
Chapter V Operation and Maintain ..... 51
5.1. Regular Inspection and Maintenance ..... 51
5.2. Common Problems & Solutions ..... 52

# Chapter I Production Information

## 1.1. Product Information

ZMC432-V2 high-performance multi-axis motion controller is a stand-alone motion controller that is compatible with EtherCAT and pulse type, which supports max 32 axes for complex continuous trajectory control.

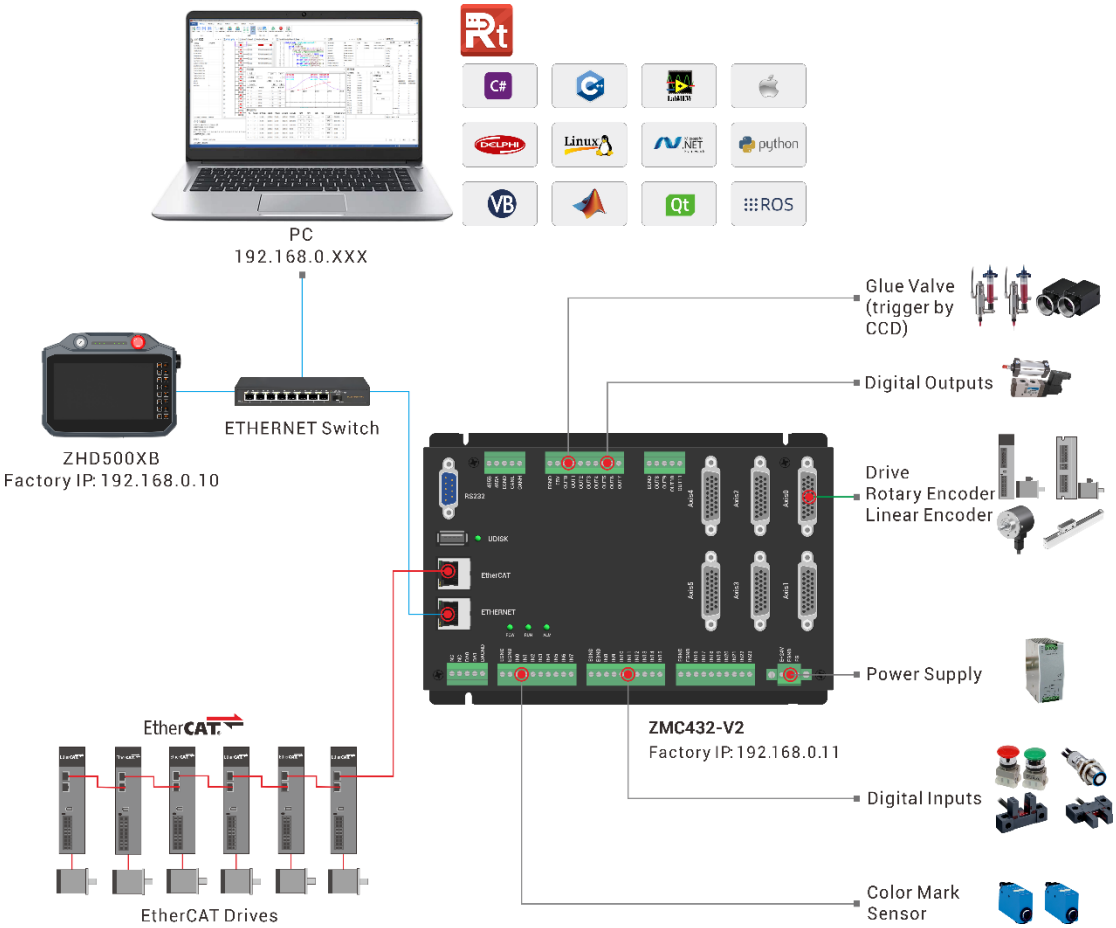


- There are interfaces of EtherCAT, single-ended pulse axes, differential pulse axes, differential encoders.
- **Basic Motion Control Functions:** point motion, electronic cam, linear interpolation, circular interpolation, continuous interpolation, robot algorithms, etc.
- **Special Motion Control Functions:** HW hardware comparison output, high-speed latch, PWM, etc., and for special model (ZMC432CL-V2), it supports pulse full-closed and pitch compensation.

- One UDISK interface is equipped, for writing and reading files, updating the program, easy to do remote support and maintain.
- It can be programmed in multi-file and multi-task by BASIC, also, PC program and controller inner RTBasic program can work at the same time.

ZMC4XX high-performance multi-axis motion controllers can be applied in robots (SCARA, Delta, 6 joints), electronic semiconductor equipment (testing equipment, assembly equipment, locking equipment, soldering machine), dispensing equipment, non-standard equipment, printing and packaging equipment, textile and garment equipment, stage entertainment equipment, medical equipment, assembly line, etc.

## 1.2. Interface Introduction

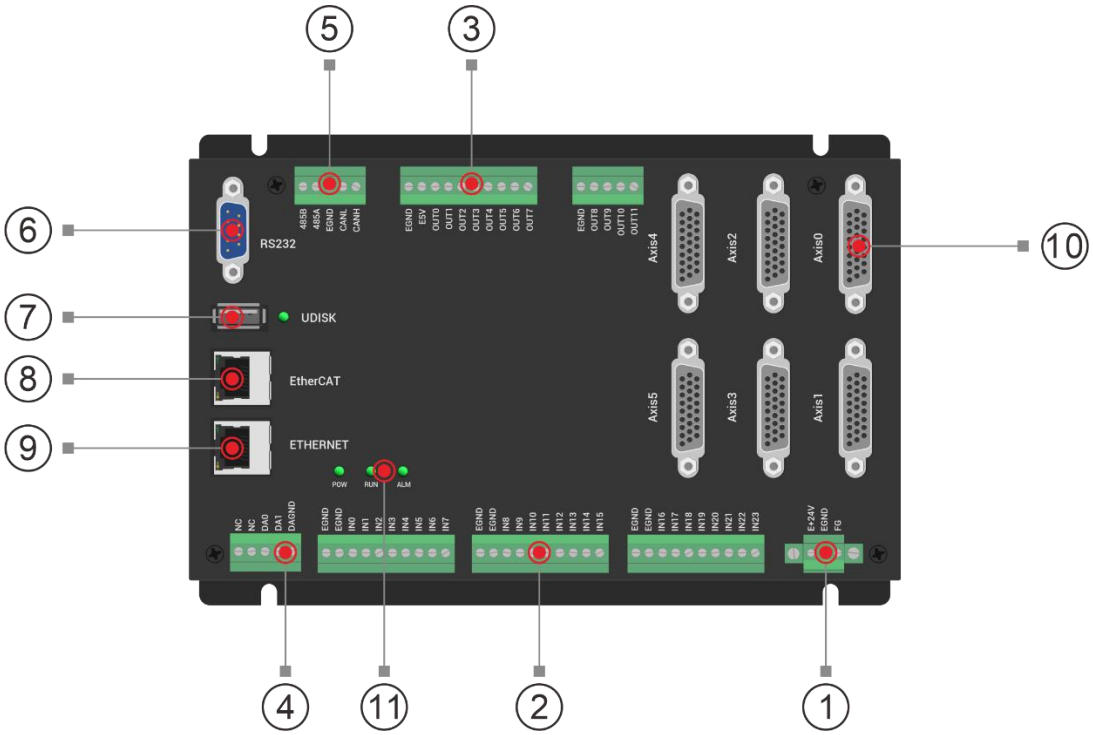


| No. | Interfaces | Descriptions |
|---|---|---|
| ① | Power | ● connect to 24V DC power supply |
| ② | DI | ● NPN type;<br>● IN0-23;<br>● some inputs (IN0~IN1) can be set as single-ended encoder, or used to do position latch. |
| ③ | DO | ● NPN type; |

| | | |
|---|---|---|
| | | ● OUT0-11;<br>● some outputs (OUT0~OUT3) can be used as single-ended pulse axes, or can be used to do PWM, HW. |
| ④ | DA | ● single-ended type;<br>● 12-bit, 0-10V. |
| ⑤ | CAN | ● connect to CAN expansion modules to expand more resources; |
| | RS485 | ● connect to upper computer;<br>● MODBUS_RTU. |
| ⑥ | RS232 | ● connect to upper computer;<br>● MODBUS_RTU. |
| ⑦ | UDISK | ● connect to USB external devices (mouse, keyboard, U disk, etc.) for program upgrading, data importing & exporting. |
| ⑧ | EtherCAT | ● connect to EtherCAT drive;<br>● or connect to EtherCAT expansion modules. |
| ⑨ | EtherNET | ● connect to upper device (PC, etc.);<br>● MODBUS_TCP protocol;<br>● it can be extended by one industrial switch. |
| ⑩ | AXIS (differential) | ● connect to servo drives, including directional / pulse, encoder, specialized I/O. |
| ⑪ | Controller Status Led | ● POWER Led: ON when power is connected. |
| | | ● RUN Led: ON when it runs normally. |
| | | ● ALM Led: ON when it runs abnormally. |

## 1.3. Product Specifications

| ZMC432-V2 | |
|---|---|
| **Base Descriptions** | |
| Motor Axes | 32 |
| Max Extended Axes | 32 (motor axes + virtual axes) |
| Program Space | 32MBYTE |
| Dimensions (mm) | 205*135.25*32.7 |
| | |
| **Axis Type** | |

| | |
|---|---|
| EtherCAT Axis | √; 1 EtherCAT bus axis |
| AXIS Differential Pulse Axes | 32 (directional / pulse + encoder + Digital I/O) |
| Single-Ended Encoder in DI | 1 |
| Single-Ended Pulse in DO | 2 |
| | |
| **DI & DO** | |
| DI | 24 (general) + 6 (specialized DI for AXIS) |
| DO | 12 (general) + 6 (specialized DI for AXIS) |
| Max Extended DI | ≤4096 |
| Max Extended DO | ≤4096 |
| | |
| **AD & DA** | |
| AD | 0 |
| DA | 2 (0-10V, 12-bit) |
| Max Extended AD | ≤1000 |
| Max Extended DA | ≤1000 |
| | |
| **Communication Interfaces** | |
| EtherNET | 1 |
| EtherCAT | 1 |
| CAN | 1 |
| RS232 | 1 |
| RS485 | 1 |
| U Disk | 1 |
| | |
| **Basic Motion Control Functions** | |
| Point & Jog | √ |
| Electronic Cam | |
| Linear Interpolation | |
| Circular Interpolation | |
| Continuous Interpolation | |
| Normal Robot Algorithm | |
| Power-Down Storage | |
| | |
| **Advanced Motion Control Functions** | |
| High-Speed Latch | 2 |
| Hard Comparison Output HW | 4 |
| General PWM | 4 |
| | |

| Special Motion Control Function | |
|---|---|
| Pulse Full Closed-Loop | √ (only valid in ZMC432CL-V2 model – with special SSI / BISS firmware) |

## 1.4. Order Information

■ ***Product Model Selection***

| Model | Description |
|---|---|
| ZMC432-V2 | 32 axes, point to point, linear, circular, electronic cam, continuous trajectory motion, robotic car instructions. |
| ZMC432-16-V2 | 16 axes, point to point, linear, circular, electronic cam, continuous trajectory motion, robotic car instructions. |
| ZMC432-16R-V2 | Functions of ZMC432-16-V2 + Delta + 6-joint robotic arm instructions. |

## 1.5. Environment Requirements

| Item | | Parameters |
|---|---|---|
| Work Temperature [1] | | -10℃-55℃ |
| Work relative Humidity | | 10%-95% non-condensing |
| Storage Temperature | | -40℃ ~ 80℃ (not frozen) |
| Storage Humidity | | Below 90%RH (no frost) |
| vibration | Frequency | 5-150Hz |
| | Displacement | 3.5mm(directly install)(<9Hz) |
| | Acceleration | 1g(directly install)(>9Hz) |
| | Direction | 3 axial direction |
| Shock (collide) | | 15g, 11ms, half sinusoid, 3 axial direction |
| Degree of Protection | | IP20 |

Note [1]: if the environment temperature is too high or too low, please operate fan cooling (fan) or heat Preservation, to ensure controller can work normally and stably.

## 1.6. Hardware Installment

The ZMC432-V2 motion controller adopts the horizontal installation method of screw fixing, and each controller should be installed with 4 screws for fastening.

→ Unit: mm → Installment Hole Diameter: 4.5mm

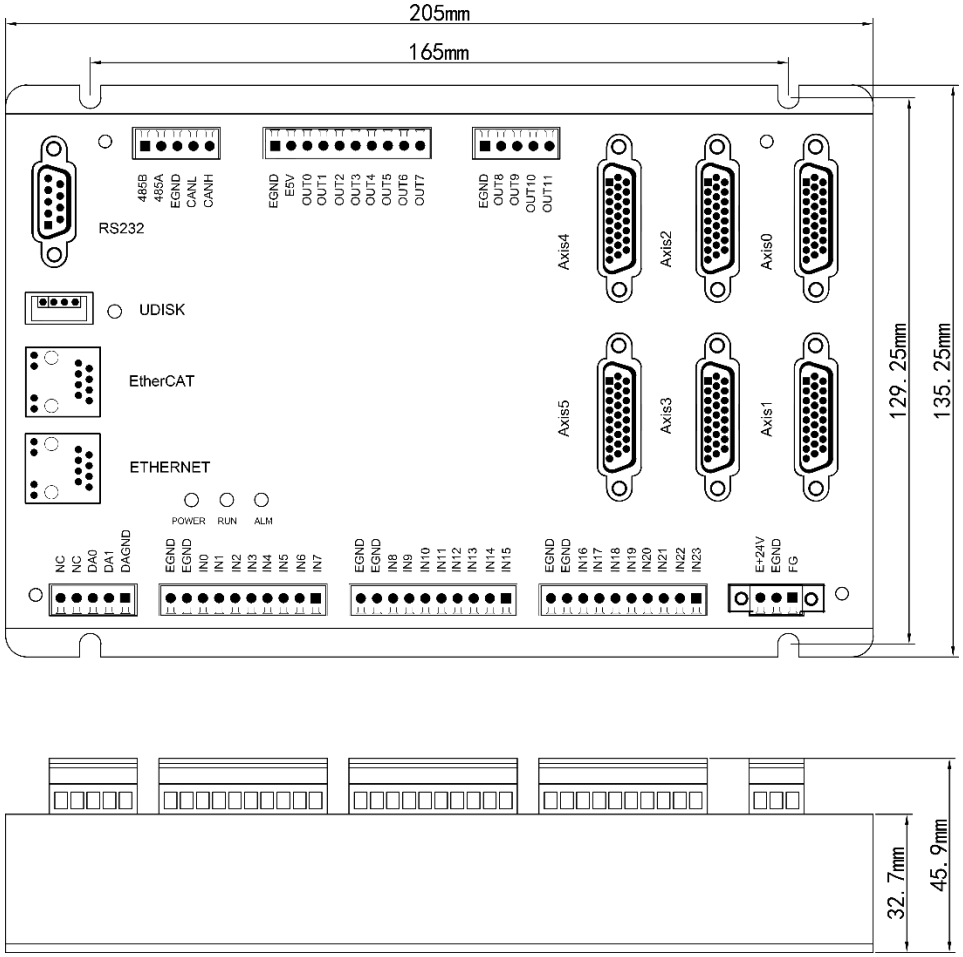

# Chapter II Hardware Interfaces

## 2.1. Power IN

| Terminal | Name | Function |
|---|---|---|
| 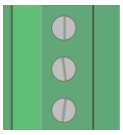 E+24V<br>EGND<br>FG | E+24V | DC Input + |
| | EGND | DC Input - |
| | FG | Protection |

## Specification

| Item | Descriptions |
|---|---|
| Voltage | DC24V±5% |
| Max Power | 10W |
| Anti-reverse connection | √ |
| Overcurrent Protection | √ |
| Isolation Power | √ |
| Cable Type | Recommend "1.0 mm² copper conductor cable" |

## 2.2. DI: Digital Inputs

| Terminal | Name | Type | Function 1 | Function 2 | Function 3 |
|---|---|---|---|---|---|
| 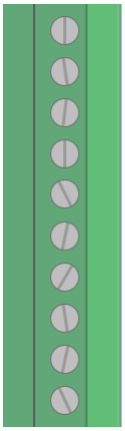 EGND<br>EGND<br>IN0<br>IN1<br>IN2<br>IN3<br>IN4<br>IN5<br>IN6<br>IN7 | EGND | / | IO Public End | / | / |
| | EGND | / | | / | / |
| | IN0 | NPN type, high-speed input | Input 0 | High Speed Latch | EA (AXIS 6) |
| | IN1 | | Input 1 | | EB (AXIS 6) |
| | IN2 | NPN type, low-speed input | Input 2 | / | |
| | IN3 | | Input 3 | / | |
| | IN4 | | Input 4 | / | |
| | IN5 | | Input 5 | / | |
| | IN6 | | Input 6 | / | |
| | IN7 | | Input 7 | / | |
| | EGND | / | IO Public End | / | |
| | EGND | / | | / | |

| | | | | | |
|---|---|---|---|---|---|
| 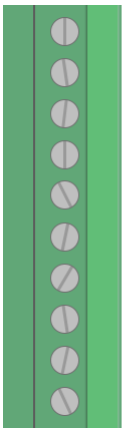 EGND<br>EGND<br>IN8<br>IN9<br>IN10<br>IN11<br>IN12<br>IN13<br>IN14<br>IN15 | IN8 | NPN type, low-speed input | Input 8 | / | |
| | IN9 | | Input 9 | / | |
| | IN10 | | Input 10 | / | |
| | IN11 | | Input 11 | / | |
| | IN12 | | Input 12 | / | |
| | IN13 | | Input 13 | / | |
| | IN14 | | Input 14 | / | |
| | IN15 | | Input 15 | / | |
| 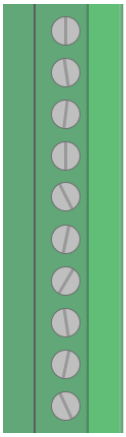 EGND<br>EGND<br>IN16<br>IN17<br>IN18<br>IN19<br>IN20<br>IN21<br>IN22<br>IN23 | EGND | / | IO Public End | / | |
| | EGND | / | | / | |
| | IN16 | NPN type, low-speed input | Input 16 | / | |
| | IN17 | | Input 17 | / | |
| | IN18 | | Input 18 | / | |
| | IN19 | | Input 19 | / | |
| | IN20 | | Input 20 | / | |
| | IN21 | | Input 21 | / | |
| | IN22 | | Input 22 | / | |
| | IN23 | | Input 23 | / | |

Notes:

- For specialized firmware version, IN0-1 support single-ended encoder function, but it needs to use AXIS_ADDRESS command to map, and configure axis type by ATYPE. While mapping, please use physical axis 6. If not use AXIS_ADDRESS to map, only set ATYPE, it can't recognize physical axis 6, that is, if you operate axis 6 now, axis 0 will be recognized and operated, then error will appear. When ATYPE=0, IN0-1 are normal inputs.
- Functions can't be reused (please choose one function).

# Specification

| Item | High-Speed Input (IN0-1) | Low-Speed Input (IN2-23) |
|---|---|---|
| Input mode | NPN type, the input is triggered when there is low level | |
| Frequency | <100kHz | <5kHz |
| Impedance | 3.3KΩ | 4.7KΩ |
| Voltage level | DC24V | DC24V |
| The voltage to open | <15V | <14.5V |
| The voltage to close | >15.1V | >14.7V |
| Minimal current | -2.3mA (negative) | -1.8mA (negative) |

| | | |
|---|---|---|
| Max current | -7.5mA (negative) | -6mA (negative) |
| Isolation mode | optoelectronic isolation | optoelectronic isolation |

# Wiring

### General Wiring:

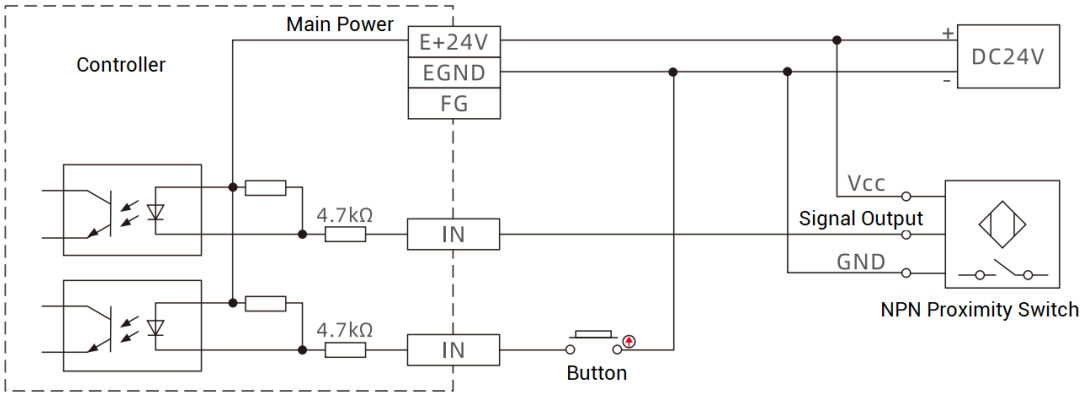


### Single-Ended Encoder Wiring (Example: EA6 & EB6):

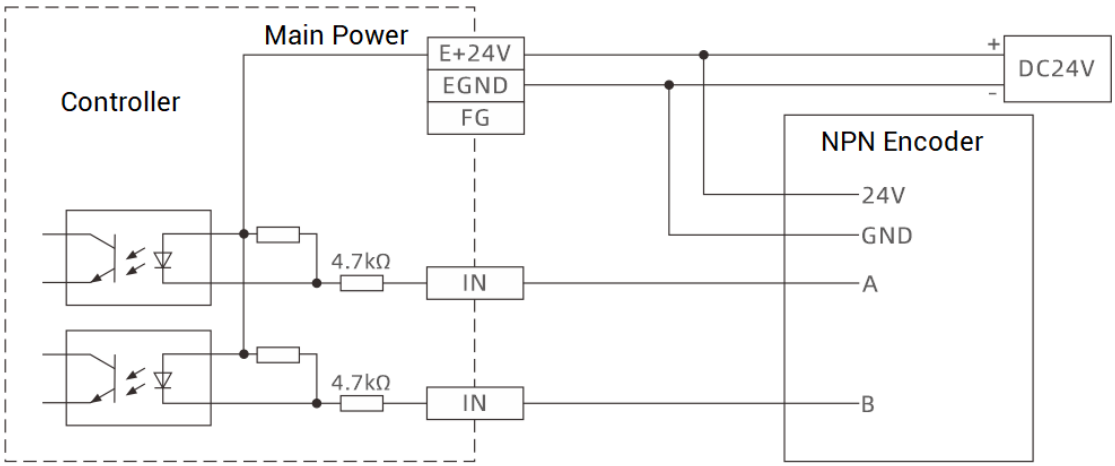


**Notes:**

- The wiring for the digital input is as shown in the diagram above. The external load can be a button switch, sensor, etc., but it is important to ensure that the signal specifications match.
- It is recommended to use the same power supply for both the load and the controller, otherwise, the negative terminals of two power supplies should be connected.

- During on-site wiring, maintain a distance from high-voltage power lines, preferably 30cm or more.
- Ensure that the controller is properly grounded, and the chassis ground should be connected to a standard factory ground rod.

## Usage Method

(1) Please follow the above wiring instructions to wiring correctly, then connect the controller to RTSys through ethernet / serial port.

(2) IN states can be read directly through "IN" command, also, it can be read through *"RTSys / Tool / IN"*.

(3) Latch function can be set and triggered by **"REGIST", "REV_IN", "DATUM_IN"**.

(4) Axis position limit signals / origin signals can be set by **"FWD_IN", "REV_IN", "DATUM_IN"** commands.

(5) Set ATYPE of IN4-6, IN8-10, IN12-14 as 3 or 6 to achieve encoder axis function. If ATYPE = 0, they are still used as general digital inputs.

(6) For above and other commands, please refer to "RTBASIC Programming Manual", or check in *RTSys / Help / RTBasic.*

(7) Codes of "encoder-axis mapping":

```
'encoder axis mapping (use EA6, EB6)
BASE (10)            'the new (remapping) axis No., don't be same as other axis No.
ATYPE = 0
BASE (6)             'the original axis No.
ATYPE = 0            'set axis type as 0
AXIS_ADDRESS (10) = (-1<<16) + 6                'bind local axis 6 with axis 10
BASE (10)
ATYPE = 3            'set axis type as encoder axis for axis 10
```

## 2.3. DO: Digital Outputs

| Terminal | Name | Type | Function 1 | Function 2 | Function 3 | 4 |
|---|---|---|---|---|---|---|
| 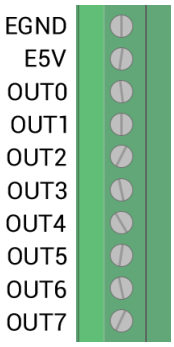 | EGND | / | IO public end | / | / | |
| | E5V | / | 5V power output, max is 300mA | / | / | |
| | OUT0 | NPN, high-speed | Output 0 | PWM 0 | HW: Hardware Comparison Output | PUL (AXIS 6) |
| | OUT1 | | Output 1 | PWM 1 | | DIR (AXIS 6) |
| | OUT2 | NPN type, low-speed output | Output 2 | PWM 2 | | PUL (AXIS 7) |
| | OUT3 | | Output 3 | PWM 3 | | DIR (AXIS 7) |
| | OUT4 | | Output 4 | / | / | |
| | OUT5 | | Output 5 | / | / | |
| | OUT6 | | Output 6 | / | / | |
| | OUT7 | | Output 7 | / | / | |
| | EGND | / | IO public end | / | / | |
| | OUT8 | NPN type, low-speed output | Output 8 | / | / | |
| | OUT9 | | Output 9 | / | / | |
| | OUT10 | | Output 10 | / | / | |
| | OUT11 | | Output 11 | / | / | |

**Notes:**

- ✧ The E5V power output port is used for PWM or common anode wiring of single-ended axis. It is not recommended for other purposes due to lower power.
- ✧ OUT0-3 have the functions of PWM and hardware comparison output, among which OUT2 and 3 are low-speed outputs.
- ✧ For special firmware, OUT0-3 support single-ended pulse-axis (axis 6 & axis 7), and it must use AXIS_ADDRESS command to map, then configure ATYPE. When ATYPE = 0, they are general outputs.
- ✧ Functions can't be reused (please choose one function).

## Specification

| Item | High Speed OUT (OUT0-1) | Low Speed OUT (OUT2-11) |
|---|---|---|
| Output mode | NPN type, it is 0V when outputs | |

| | | |
|---|---|---|
| Frequency | <400kHz | <8kHz |
| Load Voltage | ≤24V | ≤24V |
| Output Current | ≤300mA | ≤300mA |
| Overcurrent Protection | √ | √ |
| Isolation method | Optoelectronic Isolation | |

# Wiring

## General Wiring:

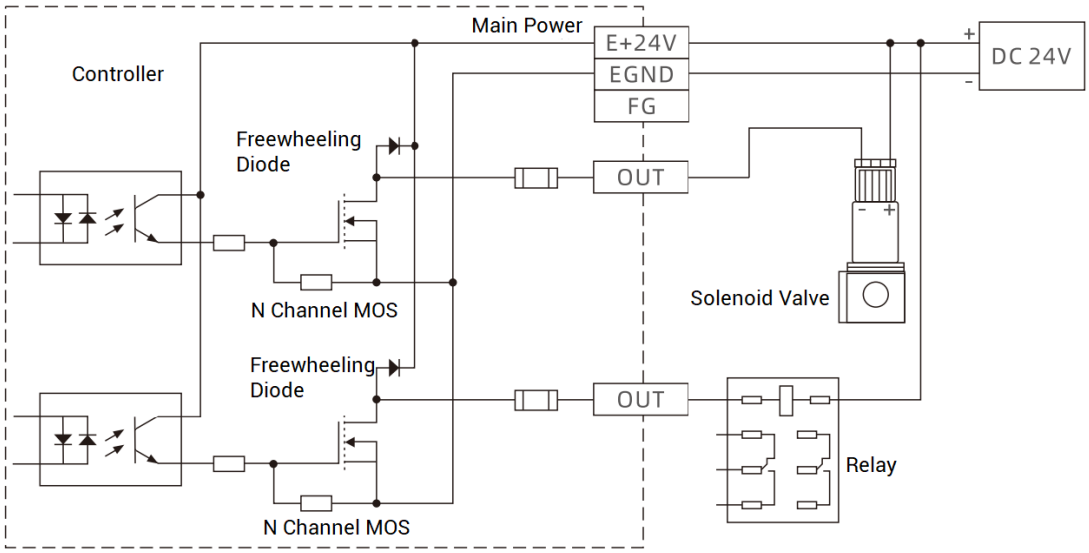


## 24V Single-Ended Pulse Axis Wiring (Example: PUL7 & DIR7):

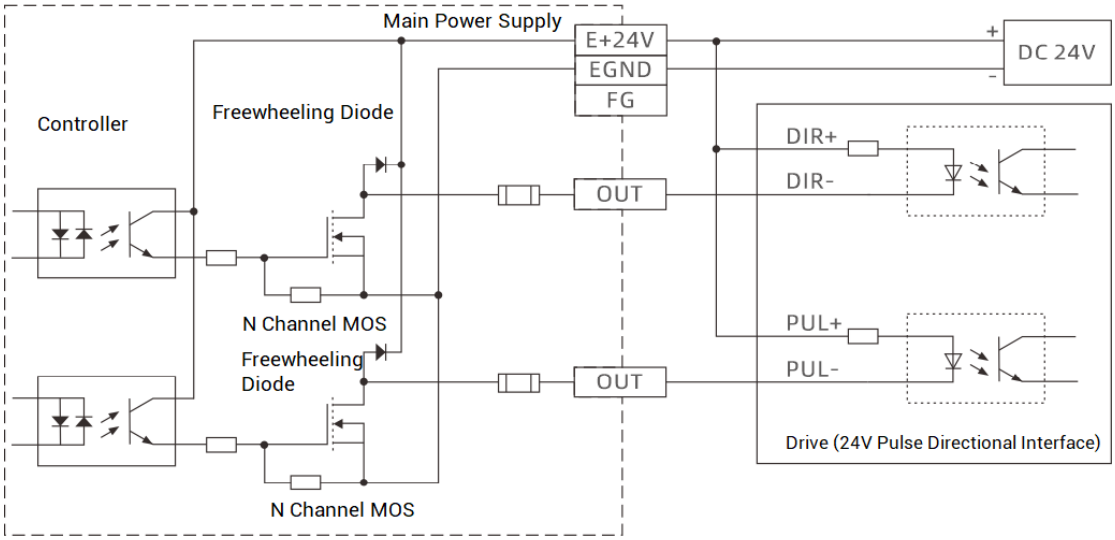

### 5V Single-Ended Pulse Axis Wiring (Example: PUL7 & DIR7):

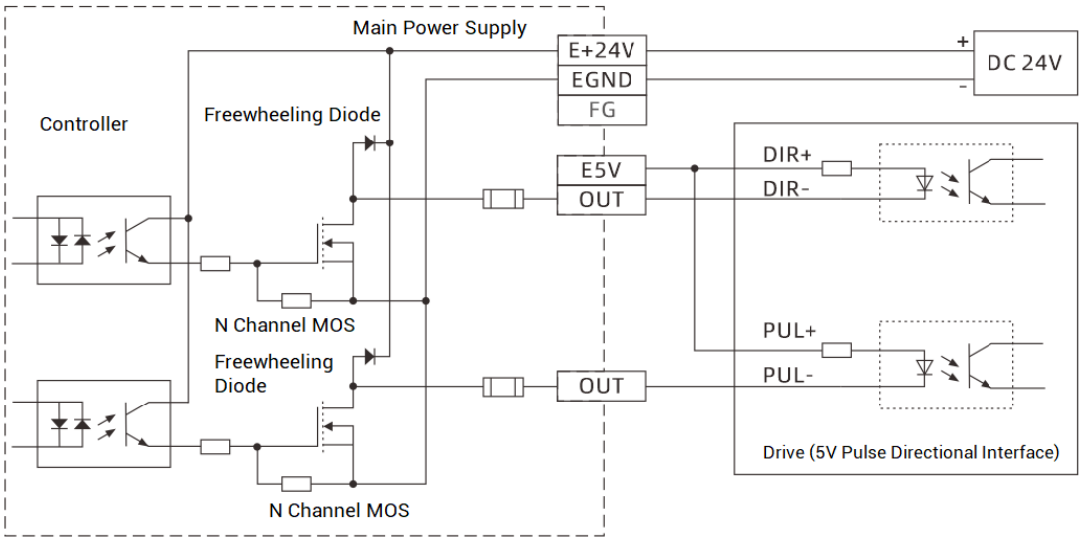


**Notes:**

- The wiring for the digital output is as shown in the diagram above. The external load can be a relay, valve solenoid etc., but it is important to ensure that the signal specifications match.
- For 5V pulse direction interface, please connect PUL+ and DIR+ to E5V interface.
- It is recommended to use the same power supply for both the load and the controller, otherwise, the negative terminals of two power supplies should be connected.
- During on-site wiring, maintain a distance from high-voltage power lines, preferably 30cm or more.
- Ensure that the controller is properly grounded, and the chassis ground should be connected to a standard factory ground rod.

## Usage Method

(1) After correct wiring & powered-on, please connect controller to RTSys by EtherNET or COM ports.

(2) OUT can be set directly through "OP" command, also, it can be operated by *"RTSys / Tool / OP"*.

(3) PWM function can be set by **"PWM_FREQ" (frequency), "PWM_DUTY"(duty cycle).**

(4) Hardware comparison output can be set by **"HW_PSWITCH2"** command.

(5) Set ATYPE of IN8-15 as 1 to achieve pulse axis function. If ATYPE = 0, they are still used as general digital inputs.

(6) For above and other commands, please refer to "RTBASIC Programming Manual", or check in *RTSys / Help / RTBasic.*

(7) Codes of "pulse-axis mapping":

```
'pulse axis mapping (use PUL6, DIR6)
BASE (16)            'the new (remapping) axis No., don't be same as other axis No.
ATYPE = 0
BASE (6)             'the original axis No.
ATYPE = 0            'set axis type as 0
AXIS_ADDRESS (16) = (-1<<16) + 6        'remapping the physical axis 6 as axis 16
BASE (16)
ATYPE = 1            'set axis type as pulse axis for axis 16
```

## 2.4. DA: Analog Outputs

| Terminal | Name | Function |
|---|---|---|
| 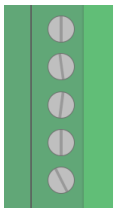 NC<br>NC<br>DA0<br>DA1<br>DAGND | NC | Reserved |
| | NC | Reserved |
| | DA0 | Analog output terminal: AOUT(0) |
| | DA1 | Analog output terminal: AOUT(1) |
| | DAGND | Analog public end |

# Specification

| Item | DA（0-1） |
|---|---|
| Resolution | 12-bit |
| Data Range | 0-4095 |
| Signal Range | 0-10V output |
| Data Refresh Ratio | 1ksps |

| | |
|---|---|
| Input Impendence / Output Load | >1KΩ (load requirement) |
| Wiring Length | <5 meter (recommended) |

## Wiring

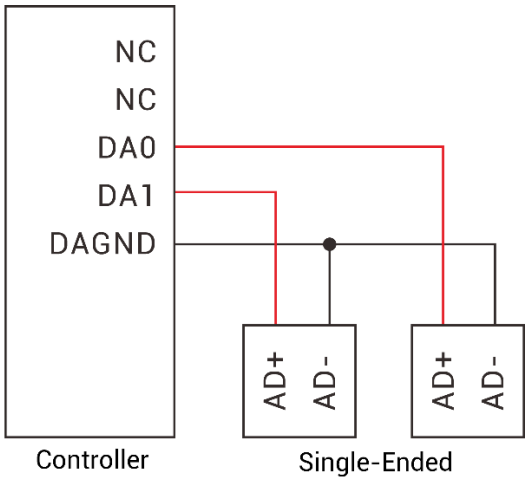


**Notes:**

- The wiring for the analog output is as shown in the diagram above. The load signal should be matched with impedance, otherwise, it will affect precision.
- Please use STP, especially in bad environments, and make sure the shielding layer is fully grounded.
- During on-site wiring, maintain a distance from high-voltage power lines, preferably 30 cm or more.
- Ensure that the controller is properly grounded, and the chassis ground should be connected to a standard factory ground rod.

## Usage Method

(1) After correct wiring & powered-on, please connect controller to RTSys by EtherNET or COM ports.

(2) AD states can be read directly through "AIN" command, and DA can be set directly

through "AOUT", also, they can be checked and operated in *"RTSys / Tool / AD/DA"*.

(3) Please refer to "RTBASIC Programming Manual", or check in *RTSys / Help / RTBasic.*

## 2.5. RS485 & CAN

| Terminal | Name | Function |
|---|---|---|
| 485B<br>485A<br>EGND<br>CANL<br>CANH 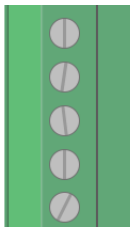 | 485B | RS485 Signal B / - |
| | 485A | RS485 Signal A / + |
| | EGND | Communication Public End |
| | CANL | CAN Differential Side L |
| | CANH | CAN Differential Side H |

## Specification

| Item | RS485 (port 1) | CAN |
|---|---|---|
| Communication Rate | ≤115200bps | ≤1Mbps |
| Terminal Resistor | No | 120Ω |
| Topology | Daisy Chain Connection Structure | |
| Nodes can be extended | Up to 127 | Up to 16 |
| Wiring Distance | <30m | <30m (500kbps) |
| Communication Isolation | √ | |

## Wiring

**RS485 Wiring:**

**CAN Wiring:**

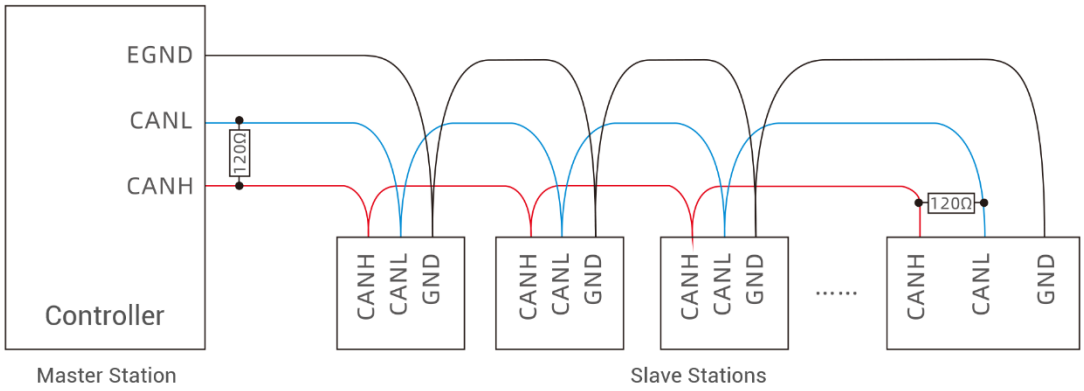


**Notes:**

- As above, the daisy chain topology is used for CAN / RS485 wiring (the star topology structure cannot be used). The shorter distance between nodes, the better.
- Please connect a 120Ω terminal resistor in parallel to each end of the CAN bus for matching the circuit impedance and ensuring communication stability.
- Please be sure to connect the public ends of each communication node to prevent CAN / RS485 chips from burning out.
- Please use STP (Shielded Twisted Pair), especially in bad environments, and make sure the shielding layer is fully grounded.
- During on-site wiring, maintain a distance from high-voltage power lines, preferably 30 cm or more.
- Ensure that the controller is properly grounded, and the chassis ground should be connected to a standard factory ground rod.

# Usage Method

(1) Please follow the above wiring instructions to wiring correctly, then connect the controller to RTSys through ethernet / serial port.

## (2) How to use CAN:

1) Set controller as CAN master station:

   a) Use **"CANIO_ADDRESS"** to set master station "address" and "velocity".

   b) Use **"CANIO_ENABLE"** to enable / disable CAN master station function.

   c) In *"RTSys>Controller>Controller Status>Communication Config"* interface, you can check communication parameters.

   d) In *"RTSys>Controller>Controller Status>ZCanNodes"* interface, you can check bus nodes parameters.

2) Correctly set the "address" and " velocity" of the slave station CAN expansion module for completing resources mapping, you can refer to "3.1 CAN Expansion".

3) After configured, repower on all slave stations to build normal communication, if the slave module "ALM" led is ON, which means the communication fails.

4) Note that the "velocity" settings of each node on the CAN bus must be consistent, and the "address" settings cannot cause conflicts, otherwise the communication establishment will fail or the communication will be disordered.

## (3) How to use RS485:

1) Please use "ADDRESS" and "SETCOM" commands to check protocol station No. and set parameters, also, you can check and set in *"RTSys>Controller>Controller Status>Communication Config"* interface.

2) According to description, set the third-party device parameters correctly to match each node.

3) After all configured, it is time to communicate.

(4) Please refer to "RTBASIC Programming Manual", or check in *RTSys / Help / RTBasic.*

## 2.6. RS232

| Terminal | PIN No. | Name | Function |
|---|---|---|---|
| 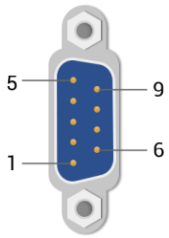 | 1, 4, 6, 7, 8 | NC | Reserved |
| | 2 | RXD | RS232 signal, receive data |
| | 3 | TXD | RS232 signal, send data |
| | 5 | EGND | 5V power -, and output for the public end |
| | 9 | E5V | 5V power +, maximum is 300mA |

## Specification

| Item | RS232 (port 0) |
|---|---|
| Communication Rate | ≤115200bps |
| Terminal Resistor | No |
| Topology | Connect Correspondingly (1 to 1) |
| Nodes can be Extended | 1 |
| Wiring Distance | <5m (recommended) |
| Communication Isolation | √ |

## Wiring

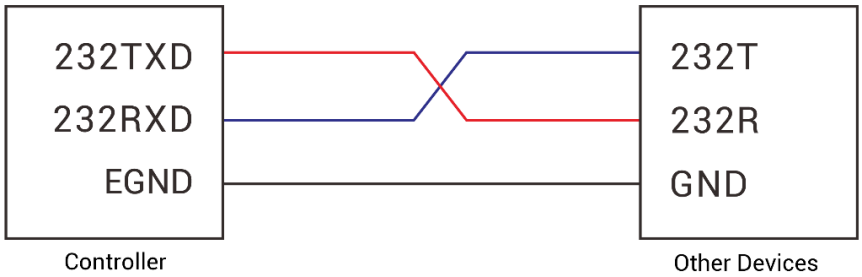


**Notes:**

- The wiring of RS232 is as above, it needs to cross-wiring for sending and receiving signals, and it is recommended to use a double-female head cross line when connecting to a computer.

- Please be sure to connect the public ends of each communication node to prevent the communication chip from burning out.
- Please use STP (Shielded Twisted Pair), especially in bad environments, and make sure the shielding layer is fully grounded.
- During on-site wiring, maintain a distance from high-voltage power lines, preferably 30 cm or more.
- Ensure that the controller is properly grounded, and the chassis ground should be connected to a standard factory ground rod.

## Usage Method

(1) Please follow the above wiring instructions to wiring correctly, then connect the controller to RTSys through ethernet / serial port.

(2) Please use "ADDRESS" and "SETCOM" commands to check protocol station No. and set parameters, also, you can check and set in *"RTSys>Controller>Controller Status>Communication Config"* interface.

(3) According to description, set the third-party device parameters correctly to match each node.

(4) After all configured, it is time to communicate.

(5) Please refer to "RTBASIC Programming Manual", or check in *RTSys / Help / RTBasic.*

## 2.7. U Disk

The ZMC432-V2 motion controller provides a USB communication interface, which can insert the U disk device. It is used for ZAR program upgrading, controller data importing and exporting, Z3P file executing, etc.

## Specification

| | Item | Descriptions |
|---|---|---|
| 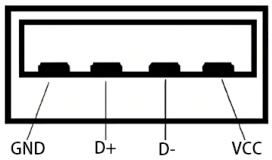 | Communication Protocol | USB2.0 |
| | Communication Ratio | ≤12Mbps |
| | Whether Isolates | No |

## Usage Method

(1) Please follow the above wiring instructions to wiring correctly, then connect the controller to RTSys through ethernet / serial port.

(2) Insert UDISK into controller UDISK terminal, when it is connected successfully, the UDISK led will be ON, then you can use U_STATE command to check UDISK state. When you make sure the communication is OK, corresponding operations (firmware upgrade, data copy, etc.) can be done (using FILE series instructions).

(3) Please refer to "RTBASIC Programming Manual", or check in *RTSys / Help / RTBasic.*

# 2.8. ETHERNET

## Specification

| PIN Definition | Item | Description |
|---|---|---|
| 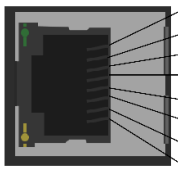 | Communication Protocol | MODBUS_TCP |
| | Communication Velocity | 100Mbps |
| | Default IP | 192.168.0.11 |
| | Communication Cable | Shielded Cat 5e Cable |
| | Cable Length | <50m |

| PIN | Signal | Description |
|---|---|---|
| 1 | TX+ | Send signal (+) |
| 2 | TX- | Send signal (-) |
| 3 | RX+ | Receive signal (+) |
| 4 | NC | Reserved |
| 5 | NC | Reserved |
| 6 | RX- | Receive signal (-) |
| 7 | NC | Reserved |
| 8 | NC | Reserved |

# Wiring

(1) Controller Ethernet can be connected to PC / HMI by one shielded cat 5e cable.

(2) Controller also can be connected to the switch for expanding ethernet channels, then connect to other devices.

(3) Ethernet LED state:

| Led | Normal-ON | Shrink |
|---|---|---|
| Green | Build 100M communication | Now it is sending & receiving data |
| Yellow | Build 10M communication | Now it is sending & receiving data |

**Notes:**

- Please use STP, especially in bad environments, and make sure the shielding layer is fully grounded.
- During on-site wiring, maintain a distance from high-voltage power lines, preferably 30 cm or more.
- Ensure that the controller is properly grounded, and the chassis ground should be connected to a standard factory ground rod.

# Usage Method

(1) Please follow the above wiring instructions to wiring correctly, then connect the controller to RTSys through ethernet / serial port.

(2) "IP_ADDRESS" can be used to modify controller IP, please note controller IP and PC IP should be in same net segment.

(3) It supports custom ethernet communication, "OPEN#" can open custom ethernet communication, "CLOSE#" can close it, "GET#" can read data from the channel and save data into it.

(4) Please refer to "RTBASIC Programming Manual", or check in *RTSys / Help / RTBasic.*

## 2.9. EtherCAT

### Specification

<table>
<tr><th colspan="3">PIN Definition</th><th>Item</th><th>Description</th></tr>
<tr><td colspan="3" rowspan="6"> 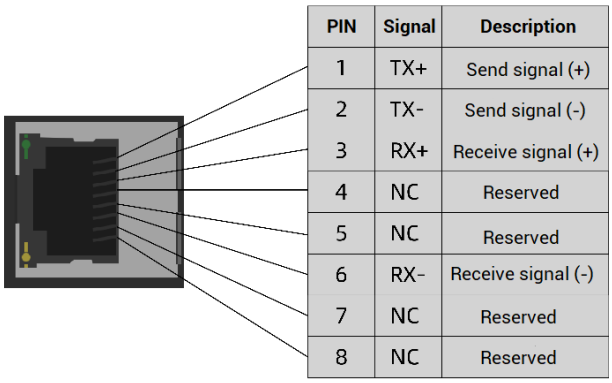
</td><td>Communication Protocol</td><td>EtherCAT</td></tr>
<tr><td>Communication Velocity</td><td>100Mbps</td></tr>
<tr><td>Refresh Cycle</td><td>Max: 500us</td></tr>
<tr><td>Communication Cable</td><td>Shielded Cat 5e Cable</td></tr>
<tr><td>Cable Length</td><td><50m</td></tr>
</table>

### Wiring

(1) Controller EtherCAT can be connected to EtherCAT drives / other EtherCAT devices via one shielded cat 5e cable: connect to controller EtherCAT to slave EtherCAT IN, then connect slave EtherCAT OUT to next one EtherCAT IN.

(2) Ethernet LED state:

| Led | Common-ON | Shrink |
|---|---|---|
| Green | Build 100M communication | Now it is sending & receiving data |
| Yellow | Build 10M communication | Now it is sending & receiving data |

**Notes:**

- Please use STP, especially in bad environments, and make sure the shielding layer is fully grounded.
- During on-site wiring, maintain a distance from high-voltage power lines, preferably 30 cm or more.
- Ensure that the controller is properly grounded, and the chassis ground should be connected to a standard factory ground rod.

## Usage Method

(1) Please follow the above wiring instructions to wiring correctly, then connect the controller to RTSys through ethernet / serial port.

**(2) How to connect to drive devices through EtherCAT:**

1) Use SLOT_SCAN command to scan the slot No. on the bus.

2) Use AXIS_ADDRESS command to map axis No., you can refer to "3.2 EtherCAT Expansion" – "Resource Mapping".

3) Use SLOT_START to open bus, SLOT_STOP to stop.

4) After completed, configure and operate local pulse axis.

**(3) How to connect to expansion module by EtherCAT:**

1) Use SLOT_SCAN command to scan the slot No. on the bus.

2) Use AXIS_ADDRESS to map axis No., use NODE_IO / NODE_AIO command to map IO No., you can refer to "3.2 EtherCAT Expansion" – "Resource Mapping".

3) Use SLOT_START to open bus, SLOT_STOP to stop.

4) After completed, configure and operate local IO, same as axis, for details, please refer to "2.2, 2.3, 2.10" – "Usage Methods".

(4) For slot No. and device node information, you can check in *"RTSys>controller>controller status>slot0node".*

(5) Please refer to "RTBASIC Programming Manual", or check in *RTSys / Help / RTBasic.*

(6) How to configure EtherCAT axis in RTSys: RTSys – EtherCAT Quick Configurations.

## 2.10. AXIS (Differential Pulse Axis)

ZMC432-V2 provides 6 local differential pulse axis interfaces, each interface is a standard

DB26 female socket, which can be used to control servo drives.

***[Axis4 and Axis 5 can support SSI/BISS absolute encoder – only valid in ZMC432CL-V2 (SSI firmware)]***

| Interface | Pin | Signal | Description |
|---|---|---|---|
| 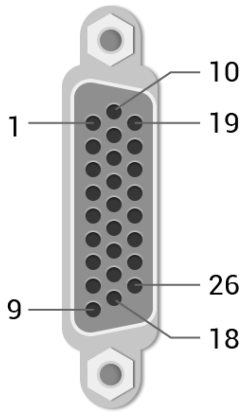 | 1 | EGND | Negative pole of IO 24V power |
| | 2 | IN24-29/ALM | General input (recommended as driver alarm) |
| | 3 | OUT12-17/ENABLE | General output (recommended as driver enable) |
| | 4 | EA- | Encoder differential input signal A- |
| | 5 | EB- | Encoder differential input signal B- |
| | 6 | EZ- | Encoder differential input signal Z- / SSI_DAT- / BISS_DAT - |
| | 7 | +5V | Positive pole of 5V power of pulse/encoder signal |
| | 8 | Reserved | Reserved |
| | 9 | DIR+ | Servo or step directional output differential signal + |
| | 10 | GND | Negative pole of 5V power of pulse/encoder signal |
| | 11 | PUL- | Servo or step pulse output differential signal - / SSI_CLK- / BISS_CLK - |
| | 12 | Reserved | Reserved |
| | 13 | GND | Negative pole of 5V power of pulse/encoder signal |
| | 14 | OVCC | Positive pole of IO 24V power |
| | 15 | Reserved | Reserved |
| | 16 | Reserved | Reserved |
| | 17 | EA+ | Encoder differential input signal A+ |
| | 18 | EB+ | Encoder differential input signal B+ |
| | 19 | EZ+ | Encoder differential input signal Z+ / SSI_DAT+ / BISS_DAT + |
| | 20 | GND | Negative pole of 5V power of |

| | | | |
|---|---|---|---|
| | 21 | GND | pulse/encoder signal |
| | 22 | DIR- | Servo or step direction output differential signal - |
| | 23 | PUL+ | Servo or step pulse output differential signal + / SSI_CLK+ / BISS_CLK + |
| | 24 | GND | Negative pole of 5V power of pulse/encoder signal |
| | 25 | Reserved | Reserved |
| | 26 | Reserved | Reserved |

**Notes:**

- ALM and ENABLE are recommended to be used as axis IO, because the drive capacity is small.
- OVCC, +5V are only used for communication between the controller and the servo driver, please do not use it as power supply for other places.
- SSI / BISS absolute values use PUL signal to do as CLK output, and use EZ signal to do as DAT input, therefore, they can't use as pulse-axis at the same time. But when EZ is not needed for AB encoder, synchronous use can be valid.
- If the controller's firmware is with Ssi, which means it supports SSI/BISS absolute value encoder.
- Then, check the controller state, it can be seen ZMC432-V2 Axis 4 and Axis 5 support SSI/BISS absolute value encoder.
- When using absolute encoders, please note the resolution and clock frequency of controller and encoder, if the clock frequency is different, it will affect the communication, which can be modified by ENCODER_BITS, after set, please power down and restart the controller to make it effect.

**Pulse-Axis DB26 PIN & I/O:**

| Pulse-Axis No. | Corresponding IN / ALM | Corresponding OUT / ENABLE |
|---|---|---|
| AXIS 0 | IN24 | OUT12 |
| AXIS 1 | IN25 | OUT13 |
| AXIS 2 | IN26 | OUT14 |
| AXIS 3 | IN27 | OUT15 |
| AXIS 4 | IN28 | OUT16 |
| AXIS 5 | IN29 | OUT17 |

# Specification

| Signal | Item | Description |
|---|---|---|
| PUL/DIR | Signal Type | Differential output signal |
| | Voltage Range | 0-5V |
| | Maximum Frequency | 10MHz |
| EA/EB/EZ | Signal Type | Differential input signal |
| | Voltage Range | 0-5V |
| | Maximum Frequency | 5MHz |
| IN24-29 | Input Method | NPN type, trigger by low level |
| | Input Frequency | <5kHz |
| | Input Impedance | 6.8KΩ |
| | Voltage Level | DC24V |
| | ON Voltage | <10.5V |
| | OFF Voltage | >10.7V |
| | Minimal Current | -1.8mA (negative) |
| | Maximum Current | -4mA (negative) |
| | Isolation | Optoelectronic Isolation |
| OUT12-17 | Output Method | NPN type, trigger by low level |
| | Frequency | <8kHz |
| | Load Voltage | ≤24V |
| | Output Current | ≤50mA |
| | Overcurrent Protection | No |
| | Isolation | Optoelectronic Isolation |
| +5V | Output Current | ≤50mA |
| OVCC | Output Current | ≤50mA |

# Wiring

**Wiring Reference with Panasonic A5/A6 Servo Driver:**

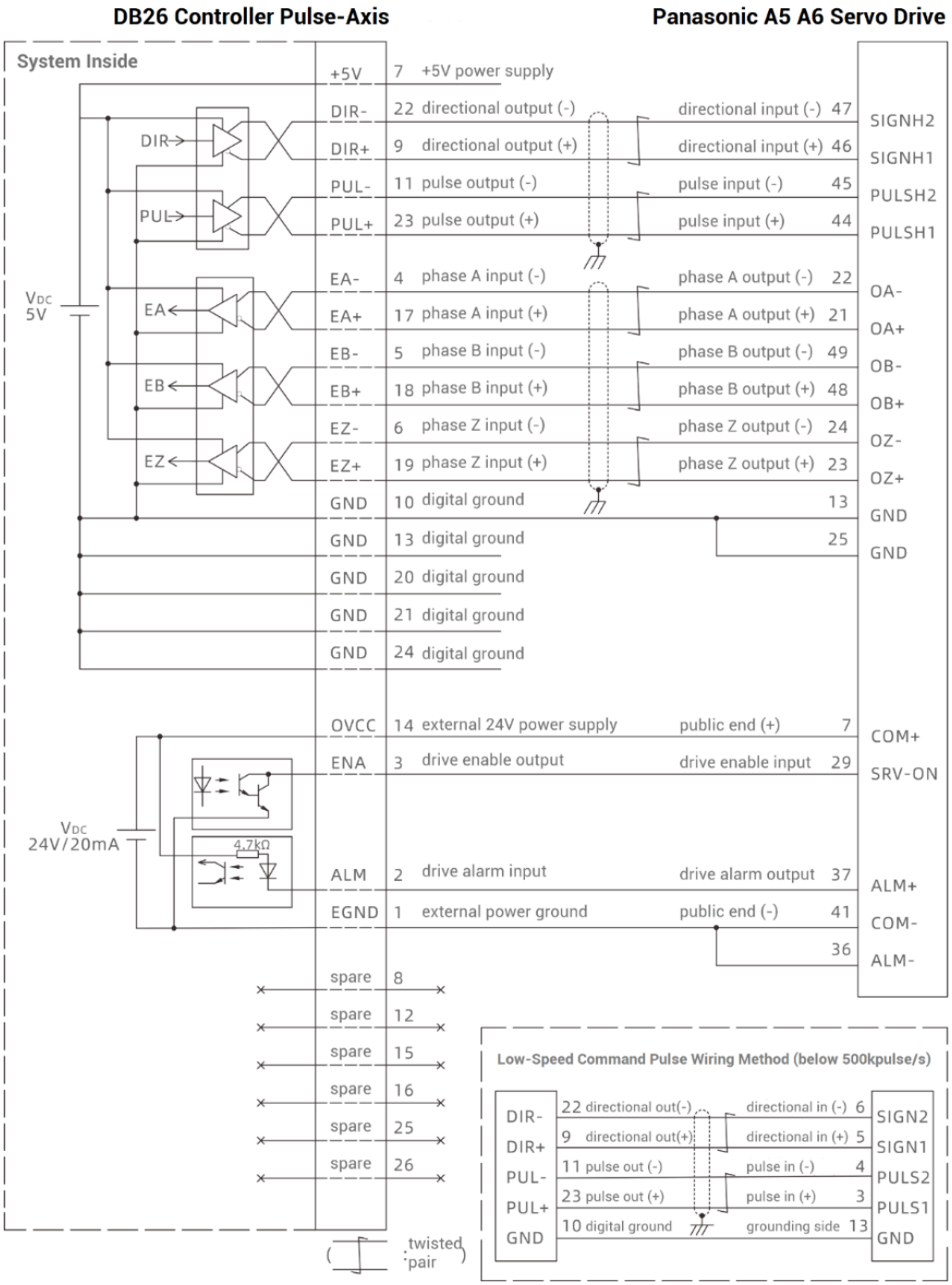


## Wiring Reference of PUL/DIR Common Anode:

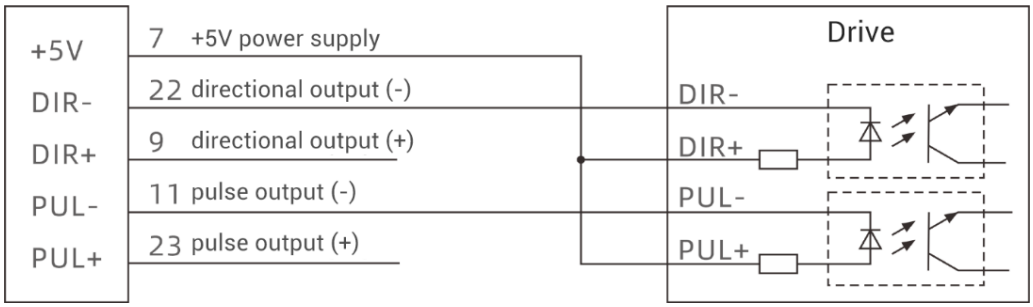

### Wiring Reference of Single-Ended EA/EB/EZ:

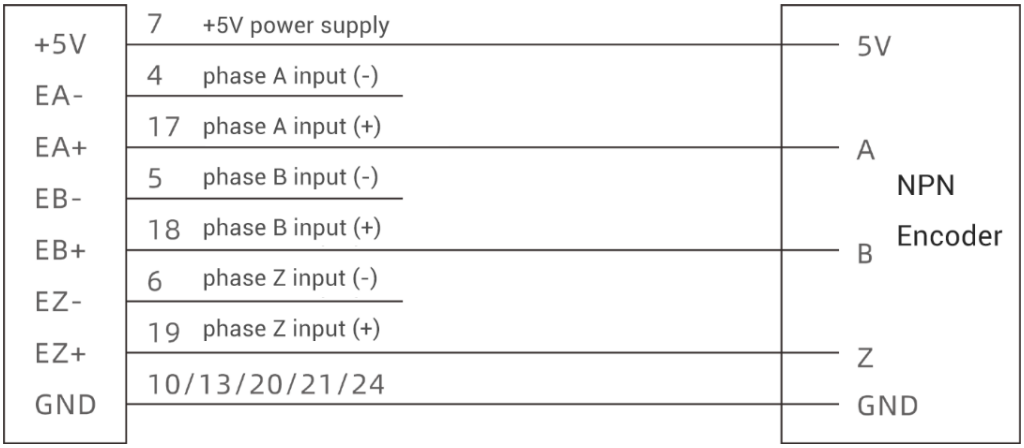


### Wiring of Absolute Encoder (Axis4 & Axis 5):

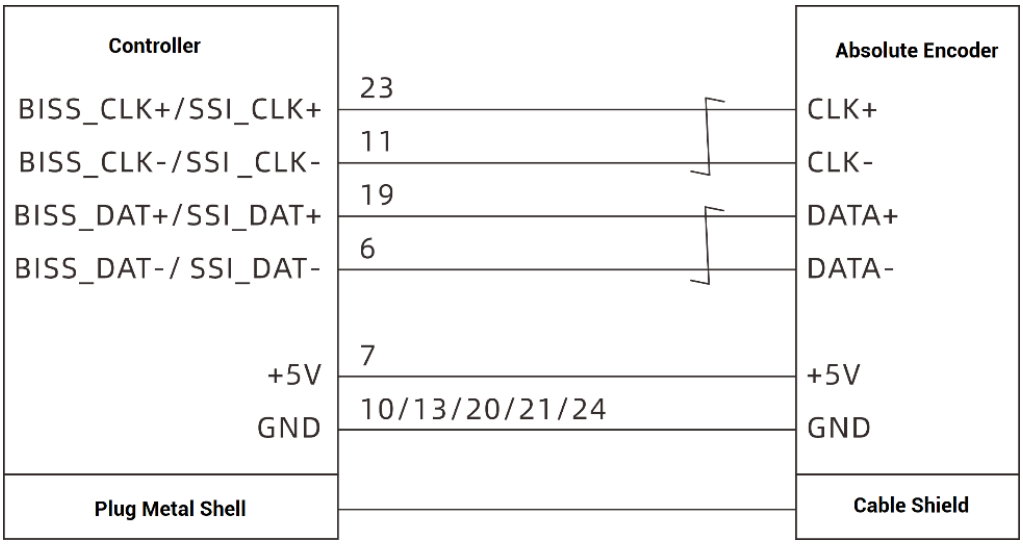


**Notes:**

- The wiring principle of the differential pulse axis interface is shown in the figure above, and the wiring methods of different types of drivers are different, please connect carefully.
- When using differential signals, be sure to connect the common zero terminals of both sides to ensure communication stability and equipment security;
- Please use STP, especially in bad environments, and make sure the shielding layer is fully grounded.

- During on-site wiring, maintain a distance from high-voltage power lines, preferably 30 cm or more.
- Ensure that the controller is properly grounded, and the chassis ground should be connected to a standard factory ground rod.

## Usage Method

(1) Please follow the above wiring instructions to wiring correctly, then connect the controller to RTSys through ethernet / serial port.

(2) Set axis basic parameters via commands of BASE, ATYPE, UNITS, SPEED, ACCEL, DECEL, etc.; and do axis remapping through AXIS_ADDRESS; enable through AXIS_ENABLE; do linear motion through MOVE.

(3) Some parameters can be set and checked in "*RTSys / View / Axis Parameter*" window; at the same time, motions also can be operated in "*RTSys / Tool / Manual*" window

(4) Please refer to "RTBASIC Programming Manual", or check in *RTSys / Help / RTBasic.*

# Chapter III Resources Expansion

When you need more resources, expansion modules can be used by CAN / EtherCAT.

## 3.1. CAN Expansion

For Zmotion, there are 3 types CAN bus expansion modules: ZIO, ZAIO, ZMIO-CAN, through them, more digital IO, analog IO, axes (up to 2) can be expanded.

Please select the expansion module according to the requirements, and select IO mapping or axis mapping according to the resources of the expansion module. Attention the No. must be different while mapping.

### Wiring

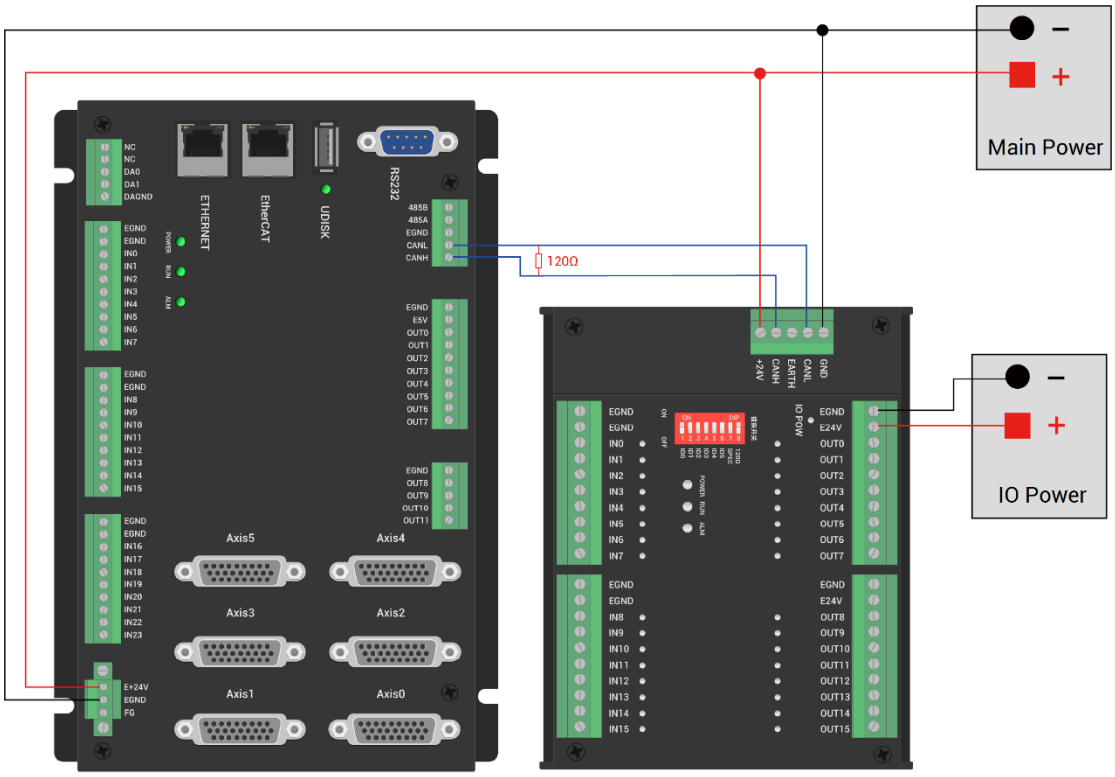


**Notes:**

- The controller and expansion modules need to share a main power supply, while the I/O power supplies of ZIO and ZMIO310-CAN need to be independently powered to

achieve isolation.

- When connecting multiple expansion modules on CAN, a 120-ohm resistor is needed to be connected in parallel between the CANL & CANH, for the ZIO expansion module that is with 8-digit dialing codes, the terminal resistor can be realized by dialing the code (DIP).

# Resources Mapping

## A. DIP Switch

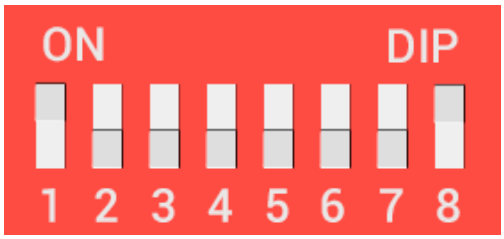


DIP Switch

Generally, the ZCAN expansion module has an 8-code DIP switch to do communication configuration and resource mapping, dial ON to take effect, and the meaning of the DIP is as follows:

- 1-4: they are used for ZCAN expansion module IO address mapping, the corresponding value is 0-15 (4-bit binary to decimal system).
- 5-6: CAN communication speed, corresponding value is 0-3 (2-bit binary to decimal system), four different speeds are optional.
- 7: reserved.
- 8: 120-ohm resistor, dial ON means a 120-ohm resistor is connected between CANL and CANH.

Dial 1-4 to select the CAN address, then the controller automatically maps expansion module IO range according to this address ID, but for axis No., please map manually.

Dial code 5-6 to select CAN bus communication speed, the corresponding speeds are as follows:

| Code 6 | Code 5 | DIP 5-6 combination value | CAN communication speed |
|---|---|---|---|
| 0 | 0 | 0 | 500KBPS (default value) |

| | | | |
|---|---|---|---|
| 0 | 1 | 1 | 250KBPS |
| 1 | 0 | 2 | 125KBPS |
| 1 | 1 | 3 | 1MBPS |

**Notes:**

- "How to configure controller as master station", please check "2.5 RS485 & CAN" – "Usage Methods".
- Communication velocities of each node on the CAN bus must be consistent, please note mapped IO No. and axis No. can't conflict.

## B. IO Mapping

IO mapping of CAN expansion module is determined by dial code 1-4, below shows digital IO mapping and analog IO mapping No. allocation:

**--Digital IO Mapping No.--**

**(0: OFF, 1: ON)**

| Code 4 | Code 3 | Code 2 | Code 1 | Address ID | Start IO No. | End IO No. |
|---|---|---|---|---|---|---|
| 0 | 0 | 0 | 0 | 0 | 16 | 31 |
| 0 | 0 | 0 | 1 | 1 | 32 | 47 |
| 0 | 0 | 1 | 0 | 0 | 0 | 63 |
| 0 | 0 | 1 | 1 | 3 | 64 | 79 |
| 0 | 1 | 0 | 0 | 4 | 80 | 95 |
| 0 | 1 | 0 | 1 | 5 | 96 | 111 |
| 0 | 1 | 1 | 0 | 6 | 112 | 127 |
| 0 | 1 | 1 | 1 | 7 | 128 | 143 |
| 1 | 0 | 0 | 0 | 8 | 144 | 159 |
| 1 | 0 | 0 | 1 | 9 | 160 | 175 |
| 1 | 0 | 1 | 0 | 10 | 176 | 191 |
| 1 | 0 | 1 | 1 | 11 | 192 | 207 |
| 1 | 1 | 0 | 0 | 12 | 208 | 223 |
| 1 | 1 | 0 | 1 | 13 | 224 | 239 |
| 1 | 1 | 1 | 0 | 14 | 240 | 255 |
| 1 | 1 | 1 | 1 | 15 | 256 | 271 |

**--Analog IO Mapping, for bit 1-4 code state & ID, please refer to above form--**

| Address ID | Start AD No. | End AD No. | Start DA No. | End AD No. |
|---|---|---|---|---|
| 0 | 8 | 15 | 4 | 7 |
| 1 | 16 | 23 | 8 | 11 |
| 2 | 24 | 31 | 12 | 15 |
| 3 | 32 | 39 | 16 | 19 |
| 4 | 40 | 47 | 20 | 23 |
| 5 | 48 | 55 | 24 | 27 |
| 6 | 56 | 63 | 28 | 31 |
| 7 | 64 | 71 | 32 | 35 |
| 8 | 72 | 79 | 36 | 39 |
| 9 | 80 | 87 | 40 | 43 |
| 10 | 88 | 95 | 44 | 47 |
| 11 | 96 | 103 | 48 | 51 |
| 12 | 104 | 111 | 52 | 55 |
| 13 | 112 | 119 | 56 | 59 |
| 14 | 120 | 127 | 60 | 63 |
| 15 | 128 | 135 | 64 | 67 |

## C. Axis Mapping

When expanding pulse axis through CAN, max 2 pulse axes can be expanded, and these two should be bound with axis No. by **AXIS_ADDRESS** at first.

"AXIS_ADDRESS(axis No.)=(32*expanded axis)+ID "

```
AXIS_ADDRESS(6)=(32*0)+2    'map axis 0 expanded by CAN module (ID is 2) as axis 6
AXIS_ADDRESS(7)=(32*1)+2    'map axis 1 expanded by CAN module (ID is 2) as axis 6
```

Please refer to "RTBASIC Programming Manual", or check in *RTSys / Help / RTBasic.*

## D. Extended Resources Checking

Connect the controller to RTSys at first, then in RTSys, enter *"controller > controller status > ZCanNode"* interface, you can know expansion module ID and corresponding mapping No.

控制器状态

| CanID | 硬件ID | 轴数 | 输入 | 输出 | AD | DA |
|---|---|---|---|---|---|---|
| Local | 432-0(ZMC432) | 32 | 30(0-29) | 18(0-17) | 0 | 2(0-1) |
| 1 | 48(ZIO1632) | 0 | 16(32-47) | 32(32-63) | 0 | 0 |
| 3 | 26(ZIO16082) | 2 | 16(64-79) | 8(64-71) | 0 | 0 |
| 4 | 10(ZAIO0802) | 0 | 0 | 0 | 8(40-47) | 2(20-21) |

基本信息 ZCan节点 槽位0节点 通讯配置

## 3.2. EtherCAT Expansion

The EIO expansion modules and ZMIO310-ECAT are expansion modules used to expand digital IO / analog IO / pulse axis by EtherCAT.

### Wiring

During wiring, use a “shielded category 5e (Cat 5e) twisted pair cable” to connect the controller's EtherCAT port to the EtherCAT IN port of the slave expansion device. Additionally, more slave devices can be connected, also, connect the EtherCAT OUT port of this expansion = to the EtherCAT IN port of the slave device to achieve multi-level expansion.

After completing the wiring for each EIO expansion module, no secondary development is required. Simply map the IO numbers and axis numbers of the expansion modules in the EtherCAT master controller to access them.

EIO expansion module wiring reference example:

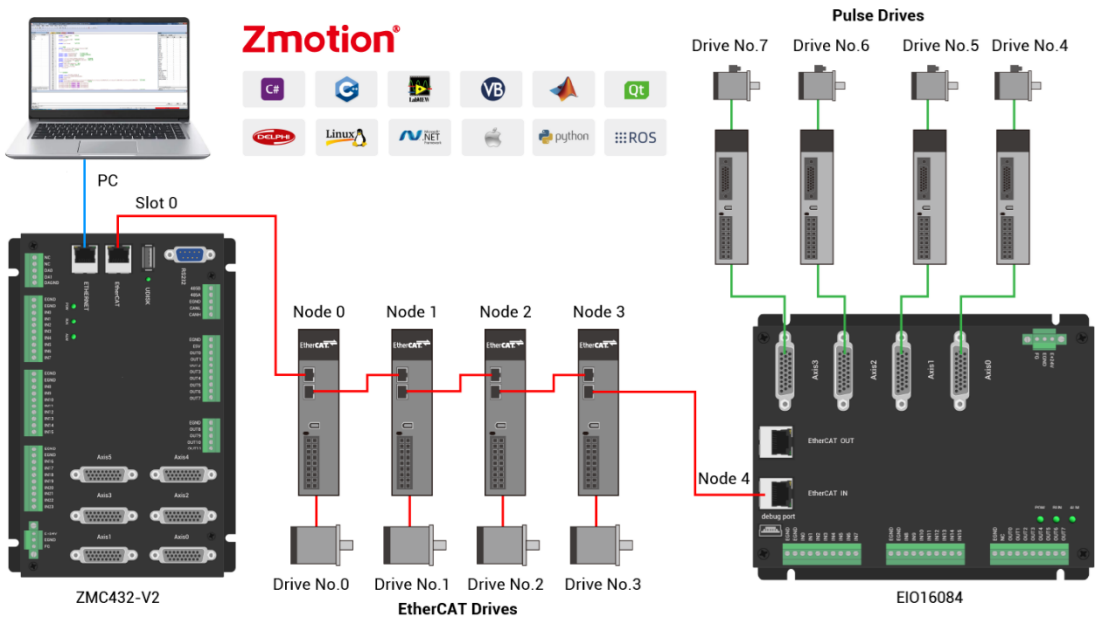


Involved number concepts in above figure are as follows: the bus-related command parameters will use the following numbers:

- **Slot No. (slot):**

  The slot number refers to the number of the bus interface on the controller, and the slot number of the EtherCAT bus is 0.

- **Device No. (node):**

  The device number refers to the number of all devices connected to a slot. It starts from 0 and is automatically numbered according to the connection sequence of the devices on the bus. You can view the total number of devices connected to the bus through the NODE_COUNT(slot) command.

- **Drive No.:**

  The controller will automatically identify the drive on the slot, and the number starts from 0, and the number is automatically numbered according to the connection sequence of the drive on the bus.

**The drive No. is different from the device No.** Only the drive device number on the slot is assigned, and other devices are ignored. While mapping axis No., drive No. will be used.

# Resources Mapping

## A. IO Mapping:

For EtherCAT expansion module IO No., they are set by NODE_IO and NODE_AIO.

When IO mapping, first check the maximum IO No. of the controller itself (including the external IO interface and the interface in the pulse axis), and then use the command to set. If the extended IO coincides with the IO No. of the controller itself, both two will work at the same time, so the IO mapped No. must not be repeated in the entire control system.

**Examples (IO & AIO):**

```
NODE_IO(0,0)=32          'set the IO start No. of slot 0 interface device 0 to 32
NODE_AIO(0,0,3)=3        'set the AIO start No. of slot 0 interface device 0 to 3
```

## B. AXIS Mapping:

Before using the axis of the expansion module, you need to use the AXIS_ADDRESS command to map the axis number, and the axis mapping also needs to pay attention to the axis number of the entire system cannot be repeated. The mapping syntax of the EIO series extended axis is the same as that of the bus driver.

**Axis mapping syntax:**

AXIS_ADDRESS( axis No.)=(slot No.<<16)+driver No.+1

**Example:**

AXIS_ADDRESS(6)=(0<<16)+0+1 '1st drive on EtherCAT, drive No. 0, bound as axis 6

AXIS_ADDRESS(7)=(0<<16)+1+1 '2nd drive on EtherCAT, drive No. 1, bound as axis 7

## C. Extended Resources Checking

Connect the controller to RTSys at first, then in RTSys, enter *"controller > controller status > Slot"* interface, you can know expansion module ID and corresponding mapping No.

# Chapter IV Programming

## 4.1. Program in RTSys Software

RTSys is a PC-side program development, debugging and diagnostic software for the Zmotion motion controllers. Through it, users can easily edit and configure the controller program, quickly develop applications, diagnose system operating parameters in real time, and debug the running program in real time. What's more, it supports Chinese and English bilingual environments.

In RTSys, there are 4 programming languages for motion control development, Basic, PLC, HMI and C language, they can run multi-tasks among them, especially for Basic, multi-task running can be achieved separately, hybrid programming is also OK with PLC, HMI and C language.

RTSys Downloading Address: https://www.zmotionglobal.com/pro_info_282.html

**And related manuals can be found in "Download":**

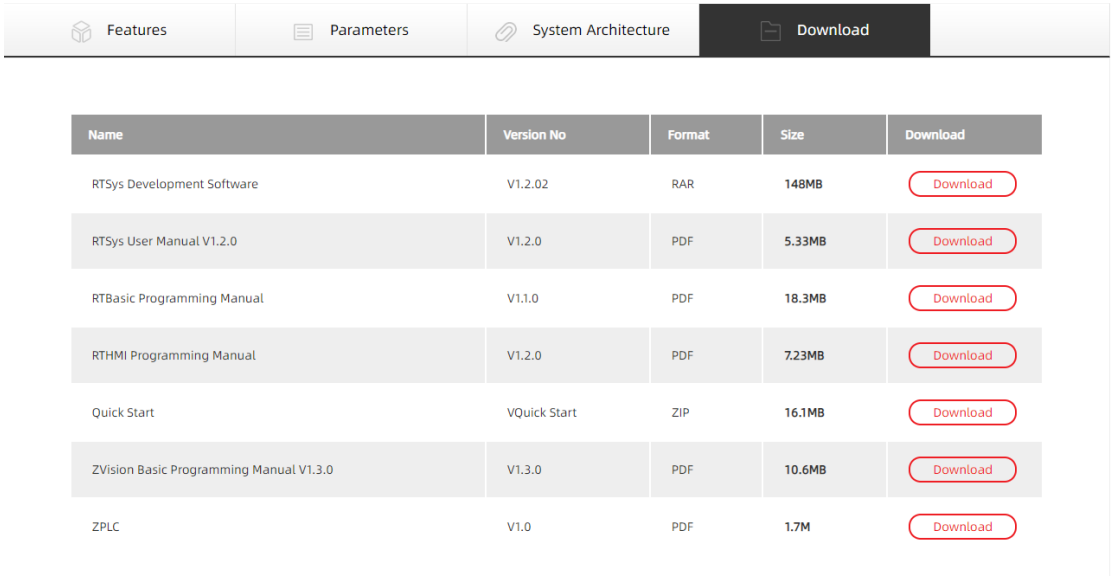


| Name | Version No | Format | Size | Download |
|---|---|---|---|---|
| RTSys Development Software | V1.2.02 | RAR | 148MB | Download |
| RTSys User Manual V1.2.0 | V1.2.0 | PDF | 5.33MB | Download |
| RTBasic Programming Manual | V1.1.0 | PDF | 18.3MB | Download |
| RTHMI Programming Manual | V1.2.0 | PDF | 7.23MB | Download |
| Quick Start | VQuick Start | ZIP | 16.1MB | Download |
| ZVision Basic Programming Manual V1.3.0 | V1.3.0 | PDF | 10.6MB | Download |
| ZPLC | V1.0 | PDF | 1.7M | Download |

| Step | Operations | Display Interface |
|---|---|---|
| 1 | Switch the Language: "Language" – "English", then there will pop | 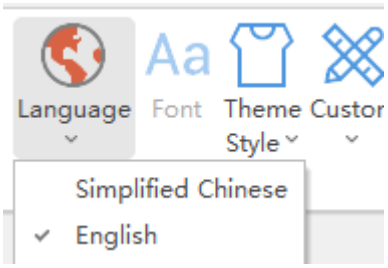  |

| | | |
|---|---|---|
| | up one window, click OK, and restart it. | Language Switch Video Showing:<br>E. How to Switch the Language<br>Find "视图" (the fourth one in the above menu), then find the "语言", choose English, restart RTSys. Enligsh RTSys will take effect when opened again.<br> 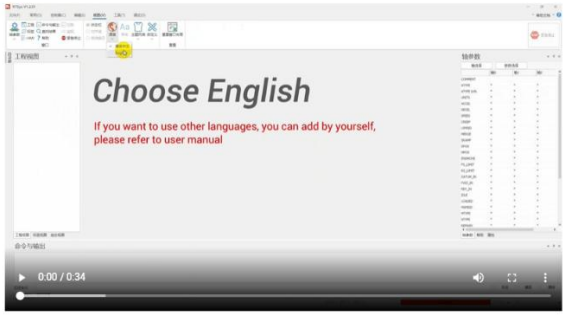 <br> |
| 2 | New Project: "File" – "New Project", Save as window will pop up, then enter file name, save the project file with suffix "zpj.". | 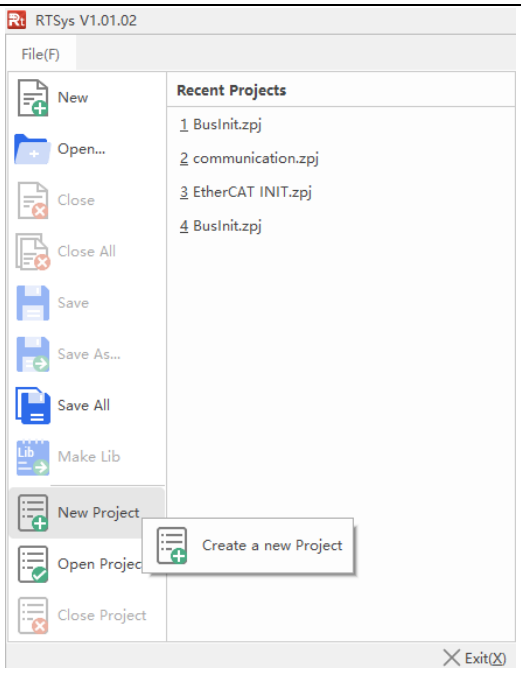 <br><br> 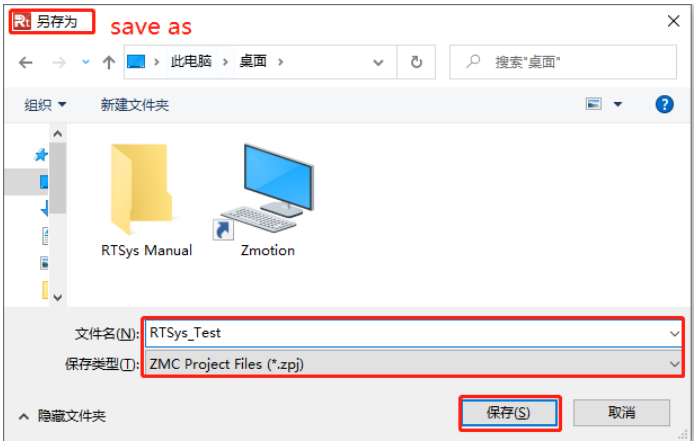 <br> |

| | | |
|---|---|---|
| 3 | New File: “File” – “New File”, select file type to build, here select Basic, click “OK”. | 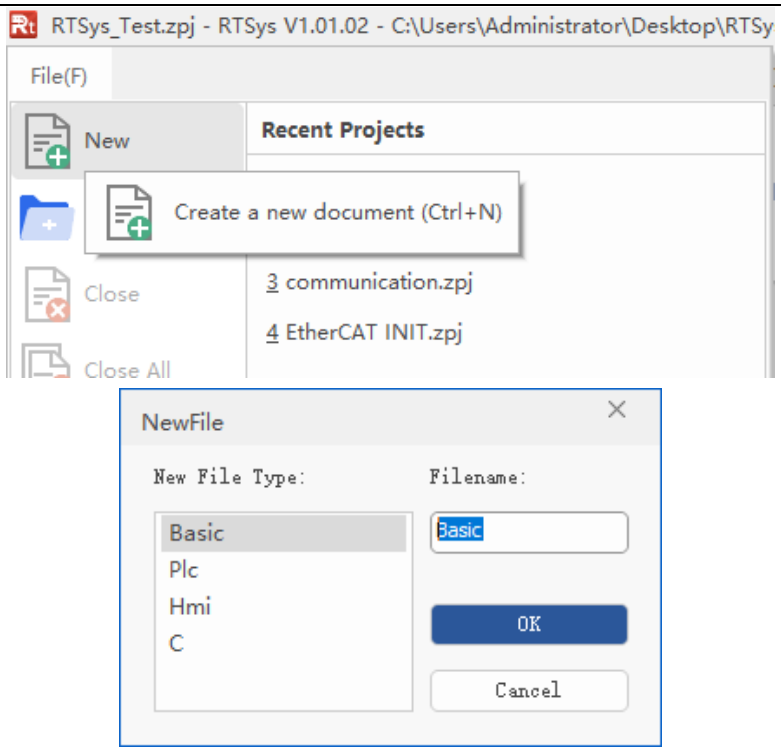 |
| 4 | Set Auto Run No.: right click the file, open task number setting window, enter task No., which can be any + value, no priority, but not the same. | 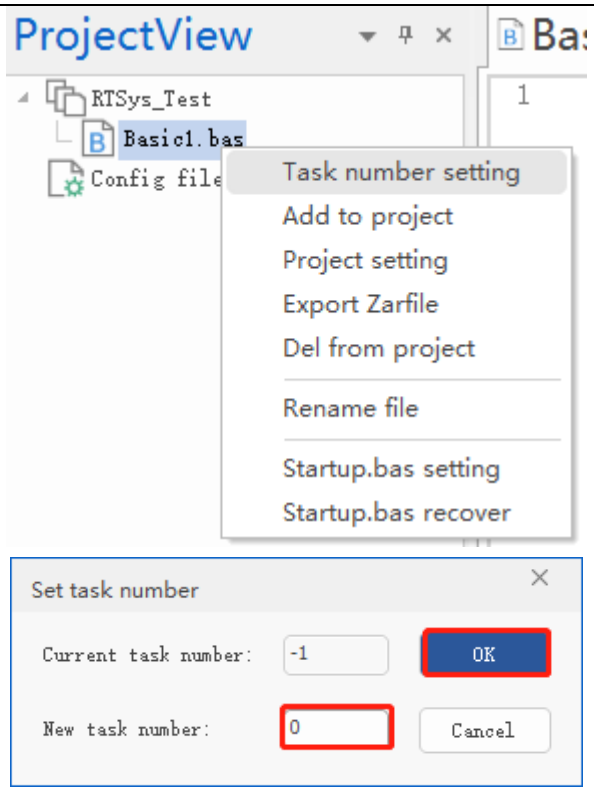 |

| | | |
|---|---|---|
| 5 | Save File: edit the program in program editing window, click "save", new built file will be saved under "zpj." project automatically. "Save all" means all files under this project will be saved. | 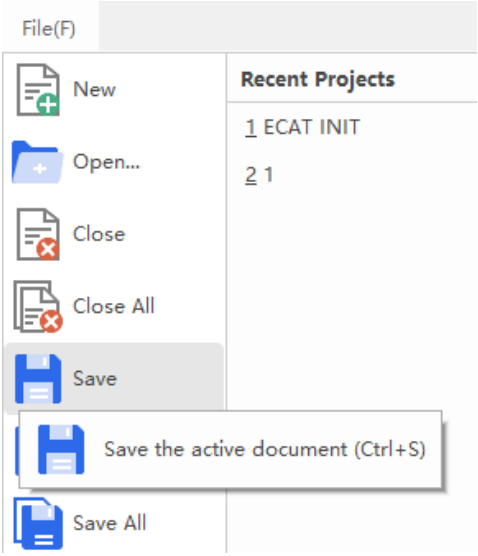 |
| 6 | Connection: Click "controller – connect", if no controller, select connect to simulator. | 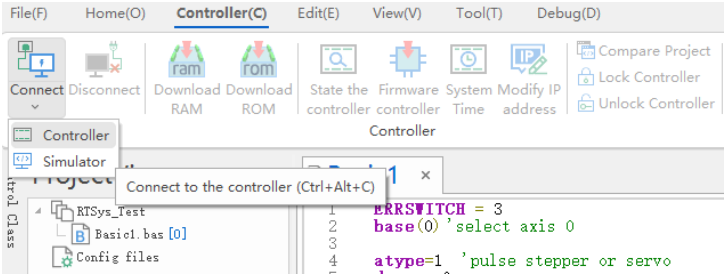 |
| | Then, "connect to controller" window will pop up, you can select serial port or net port to connect, select matched serial port parameters or net port IP address, then click "connect". | 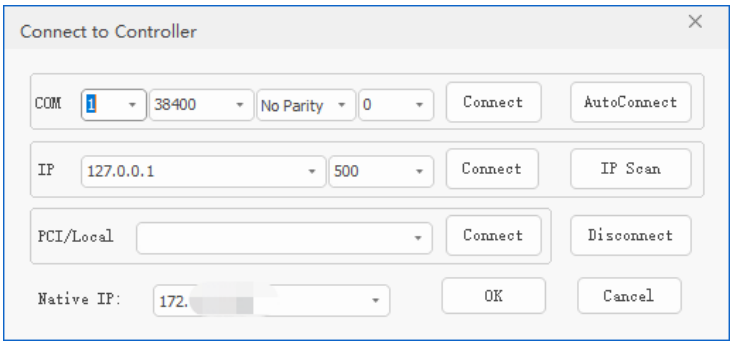 |
| 7 | Download Program into | • **RAM:** it will not save when power off.<br>• **ROM:** it will save data when power off, and when the program |

| | | |
|---|---|---|
| | Controller: "Ram/Rom" – "download RAM / download ROM", if it is successful, there is print indication, at the same time, program is downloaded into controller and runs automatically. | is connected to controller again, running according to task No.<br> 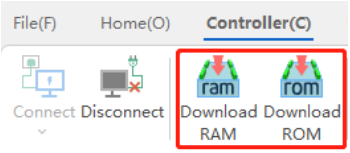 <br><br> 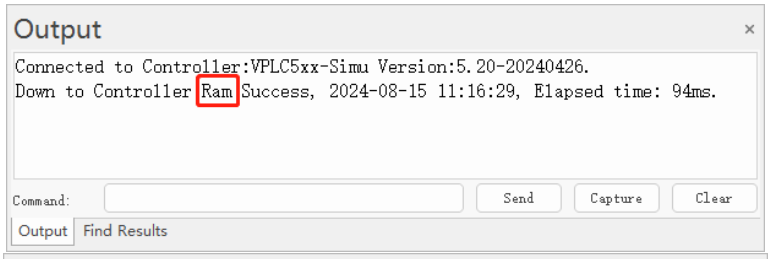 <br><br> 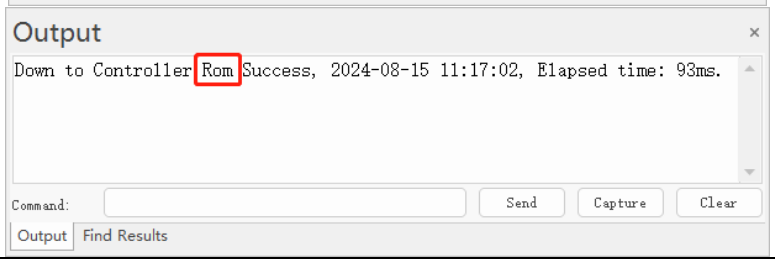 <br> |
| 8 | Debug: "Debug" – "Start/Stop Debug" to call "Task" and "Watch" window, because it was downloaded before, here select "Attach the current". | 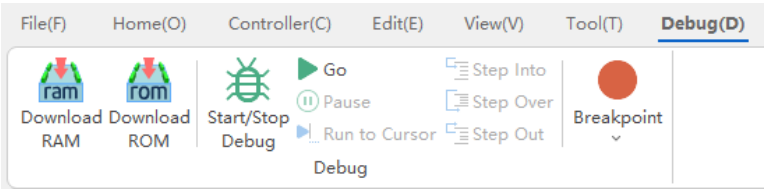 <br><br> 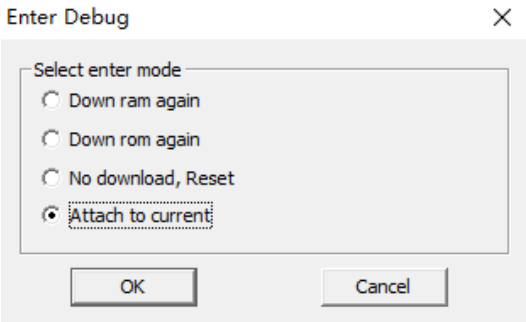 <br> |
| 9 | Scope function: Click "View" – "Scope" to open oscilloscope. It can capture needed data, for debugging. | 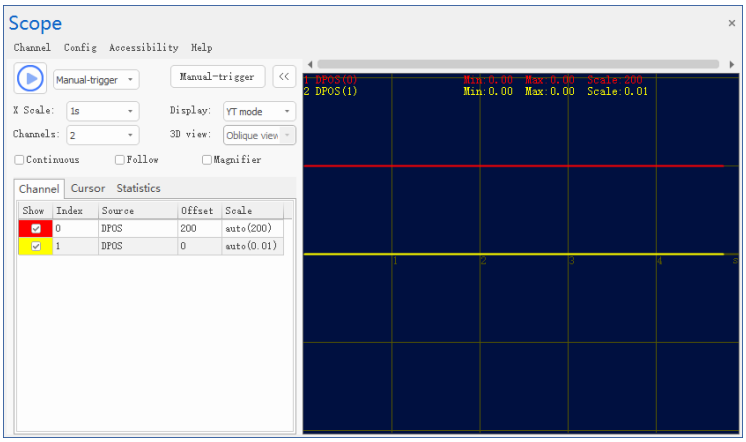 <br> |

**Notes:**

- When opening an project, choose to open the zpj file of the project. If only the Bas file is opened, the program cannot be downloaded to the controller.
- When the project is not created, only the Bas file cannot be downloaded to the controller.
- The number 0 in automatic operation represents the task number, and the program runs with task 0, and the task number has no priority.
- If no task number is set for the files in the entire project, when downloading to the controller, the system prompts the following message WARN: no program set autorun

## 4.2. Upgrade Controller Firmware

Firmware upgrade can be achieved by downloading zfm firmware package in RTSys. zfm file is the firmware upgrade package of controller, please select corresponding firmware because different models are with different packages, please contact manufacturer).

**How to update:**

a. Open ZDevelop / RTSys software, then click "controller – connect", find PCI/LOCAL method, click "connect". If connected, there will be "Connected to Controller: PCIE464 Version: 4.93 – 20231220." In "output" window.

b. Click "controller – state the controller", find basic info, then current software version can be checked.

c. Click "controller – update firmware", current controller model and software version can be viewed.

d. Click "browse", and select saved firmware file, click "update", then one window will pop up, please click "ok".

e. After that, "connect to controller" window appears again, and please select "PCI/Local" again, and click "connect".

f. When connection is successful, "firmware update" interface is shown. Now

system enters ZBIOS state, please click “update” again.

g. When it is loaded, “firmware update” window disappears, now in output window, it shows “Update firmware to Controller Success”.

h. Do step a and step b again, check whether the firmware is updated or not.

## 4.3. Program in Host-Computer by PC Languages

The controller supports development under various operating systems such as windows, linux, Mac, Android, and wince, and provides dll libraries in various environments such as vc, c#, vb.net, and labview, as shown in the figure below. PC software programming refers to "Zmotion PC Function Library Programming Manual".

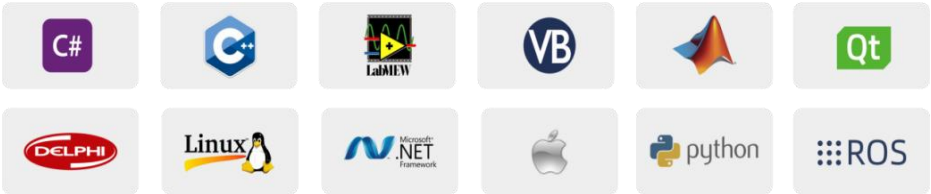


The program developed using the PC software cannot be downloaded to the controller, and it is connected to the controller through the dll dynamic library. The dll library needs to be added to the header file and declared during development.

- Get PC library file, example: https://www.zmotionglobal.com/download_list_17.html

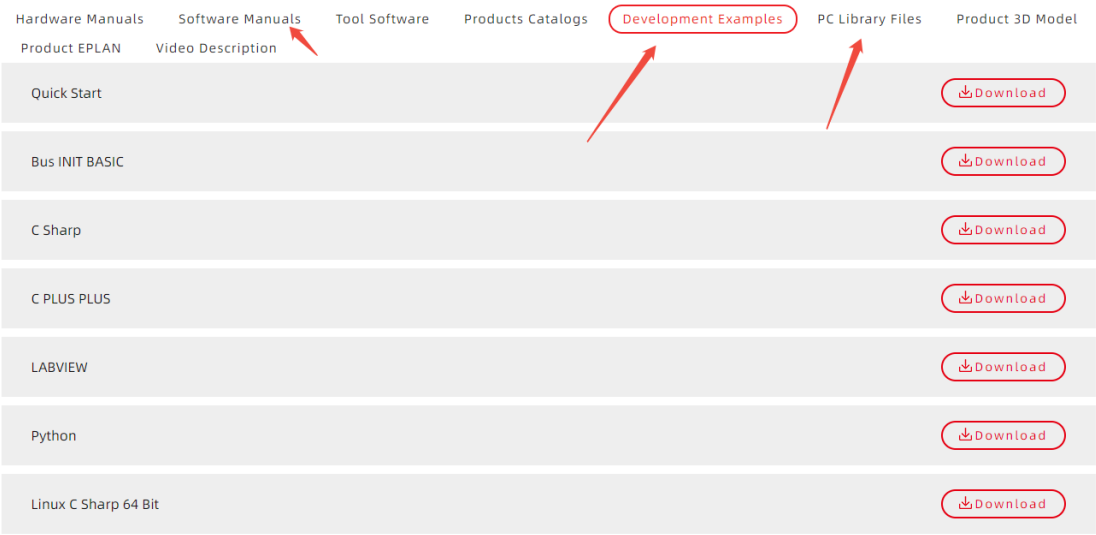

The c++ project development process in VS is as follows:

| Step | Operations | Display Interface |
|---|---|---|
| 1 | Open VS, click “File” – “New” – “Project”. | 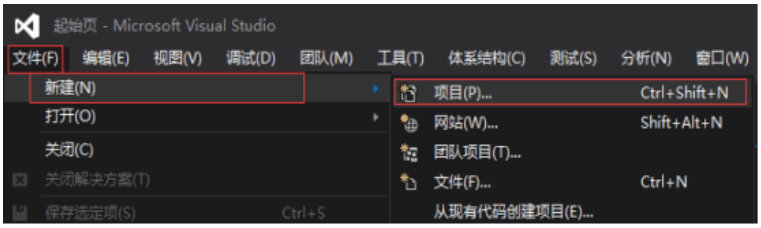 |
| 2 | Select development language as “Visual C++” and the select program type as “MFC application type”. | 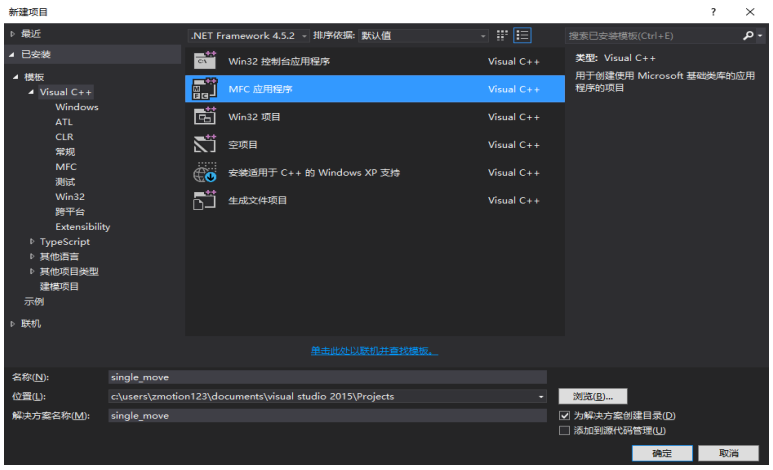 |
| 3 | Select “Based on basic box”, click “next” or “finish” | |
| 4 | Find C++ function library provided by manufacturer. Routine is below (64-bit library) | 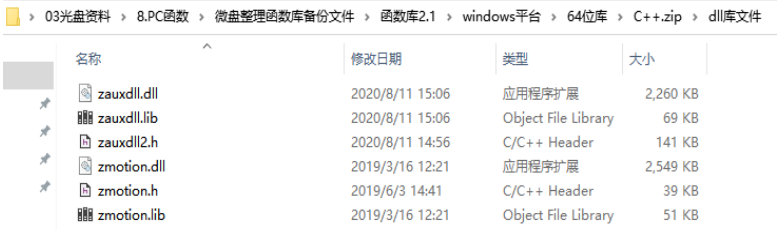 |
| 5 | Copy all DLL related library files under the above path to the newly created project. | |

| | | | |
|---|---|---|---|
| 6 | Add a static library and related header files to the project. Static library: zauxdll.lib, zmotion.lib<br>Related header files: zauxdll2.h, zmotion.h | 1) Right-click the header file first, and then select: "Add" → "Existing Item". | 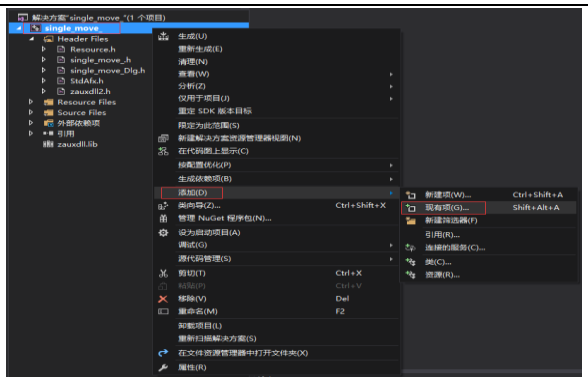 |
| | | 2) Add static libraries and related header files in sequence in the pop-up window. | 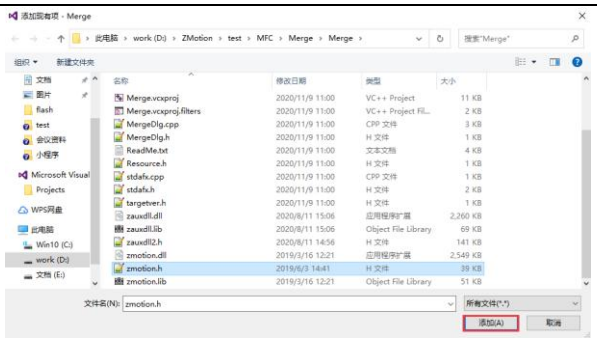 |
| 7 | Declare the relevant header files and define the controller connection handle, so far the project is newly created. | 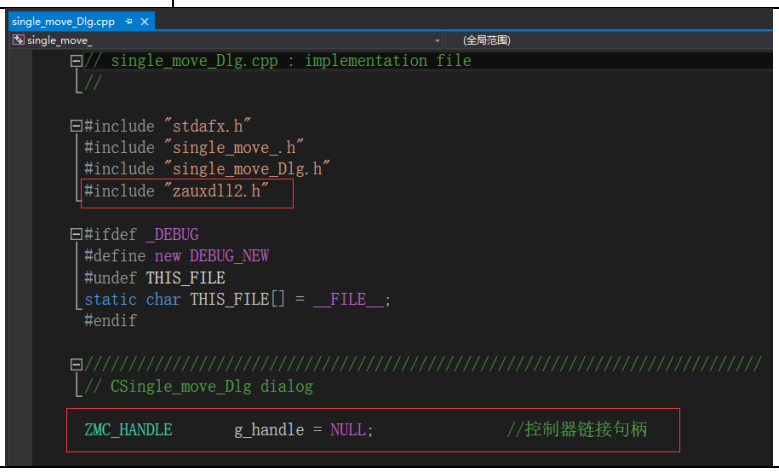 | |

```
// single_move_Dlg.cpp : implementation file
//

#include "stdafx.h"
#include "single_move_.h"
#include "single_move_Dlg.h"
#include "zauxdll2.h"

#ifdef _DEBUG
#define new DEBUG_NEW
#undef THIS_FILE
static char THIS_FILE[] = __FILE__;
#endif

/////////////////////////////////////////////////////////////////////////////
// CSingle_move_Dlg dialog

ZMC_HANDLE        g_handle = NULL;              //控制器链接句柄
```

# Chapter V Operation and Maintain

The correct operation and maintenance of the device can not only guarantee and extend the life cycle of the equipment itself, but also take technical management measures according to the pre-specified plan or the corresponding technical conditions to prevent equipment performance degradation or reduce the probability of equipment failure.

## 5.1. Regular Inspection and Maintenance

The working environment has an impact on the device. Therefore, it is usually inspected regularly based on the inspection cycle of 6 months to 1 year. The inspection cycle of the device can be appropriately adjusted according to the surrounding environment to make it work within the specified standard environment.

| Check item | Check content | Inspection standards |
|---|---|---|
| power supply | Check whether the voltage is rated | DC 24V ( -5%~5% ) |
| surroundings | Whether the ambient temperature is within the specified range (when installed in the cabinet, the temperature inside the cabinet is the ambient temperature) | -10°C - 55°C |
| | Whether the ambient humidity is within the specified range (when installed in the cabinet, the humidity in the cabinet is the ambient humidity) | 10%-95% non-condensing |
| | Is there direct sunlight | No |
| | With or without droplets of water, oil, chemicals, etc. | No |
| | Whether there is dust, salt, iron filings, dirt | No |
| | Whether there is corrosive gas | No |
| | Whether there are flammable and | No |

| | | |
|---|---|---|
| | explosive gases or articles | |
| | Whether the device is subjected to vibration or shock | Should be within the range of vibration resistance and impact resistance |
| | Is the heat dissipation good | Keep good ventilation and heat dissipation |
| Installation and Wiring Status | Whether the basic unit and the expansion unit are installed firmly | The mounting screws should be tightened without loosening |
| | Whether the connecting cables of the basic unit and the expansion unit are fully inserted | The connection cable cannot be loosened |
| | Are the screws of the external wiring loose | Screws should be tightened without loosening |
| | Whether the cable is damaged, aged, cracked | The cable must not have any abnormal appearance |

## 5.2. Common Problems & Solutions

| Problems | Suggestions |
|---|---|
| Motor does not rotate. | 1. Check whether the ATYPE of the controller is correct.<br>2. Check whether hardware position limit, software position limit, alarm signal work, and whether axis states are normal.<br>3. Check whether motor is enabled successfully.<br>4. Confirm whether pulse amount UNITS and speed values are suitable. If there is the encoder feedback, check whether MPOS changes.<br>5. Check whether pulse mode and pulse mode of drive are matched.<br>6. Check whether alarm is produced on motion controller station or drive station.<br>7. Check whether the wiring is correct.<br>8. Confirm whether controller sends pulses normally. |

| | |
|---|---|
| The position limit signal is invalid. | 1. Check whether the limit sensor is working normally, and whether the "input" view can watch the signal change of the limit sensor.<br>2. Check whether the mapping of the limit switch is correct.<br>3. Check whether the limit sensor is connected to the common terminal of the controller. |
| No signal comes to the input. | 1. Check whether the limit sensor is working normally, and whether the "input" view can watch the signal change of the limit sensor.<br>2. Check whether the mapping of the limit switch is correct.<br>3. Check whether the limit sensor is connected to the common terminal of the controller. |
| The output does not work. | 1. Check whether IO power is needed.<br>2. Check whether the output number matches the ID of the IO board. |
| POWER led is ON, RUN led is OFF. | 1. Check whether the power of the power supply is sufficient. At this time, it is best to supply power to the controller alone, and restart the controller after adjustment.<br>2. Check whether the ALM light flickers regularly (hardware problem). |
| RUN led is ON, ALM led is ON. | 1. Program running error, please check ZDevelop error code, and check application program. |
| Fail to connect controller to PC through serial port. | 1. Check whether the serial port parameters are modified by the running program, you can check all the current serial port configurations through ?*SETCOM.<br>2. Check whether the serial port parameters of the PC match the controller.<br>3. Open the device manager and check whether the serial driver of the PC is normal. |
| CAN expansion module cannot be connected. | 1. Check the CAN wiring and power supply circuit, whether the 120 ohm resistor is installed at both |

| | |
|---|---|
| | ends.<br>2. Check the master-slave configuration, communication speed configuration, etc.<br>3. Check the DIP switch to see if there are multiple expansion modules with the same ID.<br>4. Use twisted-pair cables, ground the shielding layer, and use dual power supplies for severe interference (the main power supply of the expansion module and the IO power supply are separately powered) |
| Fail to connect controller to PC through net port. | 1. Check IP address of PC, it needs to be at the same segment with controller IP address.<br>2. Check controller IP address, it can be checked and captured after connection through serial port.<br>3. When net port led is off, please check wiring.<br>4. Check whether controller power led POWER and running indicator led RUN are ON normally.<br>5. Check whether the cable is good quality, change one better cable to try again.<br>6. Check whether controller IP conflicts with other devices.<br>7. Check whether controller net port channel ETH are all occupied by other devices, disconnect to other devices, then try again.<br>8. When there are multiple net cards, don't use other net cards, or change one computer to connect again.<br>9. Check PC firewall setting.<br>10. Use “Packet Internet Groper” tool (Ping), check whether controller can be Ping, if it can't, please check physical interface or net cable.<br>11. Check IP address and MAC address through arp-a. |